GE Healthcare

Signa HD, HDx & HDxt 1.5T Block Diagrams & Supplemental Schematics (Release 12.x, 14.x & 15.x)

Technical Publication

5133310
Rev 12

DAMAGE IN TRANSPORTATION

All packages should be closely examined at time of delivery. If damage is apparent, have notation **"damage in shipment"** written on **all** copies of the freight or express bill **before** delivery is accepted or "signed for" by a General Electric representative or a hospital receiving agent. Whether noted or concealed, damage **MUST** be reported to the carrier **immediately** upon discovery, or in any event, within **14** days after receipt, and the contents and containers held for inspection by the carrier. A transportation company will not pay a claim for damage if an inspection is not requested within this **14** day period.

File a report with

- Call 1–800–548–3366 and use option 8.
- Contact your local service coordinator for more information on this process.

Rev. 08/15/2003

© 2004 – 2010, General Electric Company
GE Medical Systems, a General Electric Company, going to market as GE Healthcare
3200 N. Grandview Boulevard
Waukesha, Wisconsin 53188
USA

www.gehealthcare.com

WARNING

- **THIS SERVICE MANUAL IS AVAILABLE IN ENGLISH ONLY.**
- **IF A CUSTOMER'S SERVICE PROVIDER REQUIRES A LANGUAGE OTHER THAN ENGLISH, IT IS THE CUSTOMER'S RESPONSIBILITY TO PROVIDE TRANSLATION SERVICES.**
- **DO NOT ATTEMPT TO SERVICE THE EQUIPMENT UNLESS THIS SERVICE MANUAL HAS BEEN CONSULTED AND IS UNDERSTOOD.**
- **FAILURE TO HEED THIS WARNING MAY RESULT IN INJURY TO THE SERVICE PROVIDER, OPERATOR OR PATIENT FROM ELECTRIC SHOCK, MECHANICAL OR OTHER HAZARDS.**

AVERTISSEMENT

- **CE MANUEL DE MAINTENANCE N'EST DISPONIBLE QU'EN ANGLAIS.**
- **SI LE TECHNICIEN DU CLIENT A BESOIN DE CE MANUEL DANS UNE AUTRE LANGUE QUE L'ANGLAIS, C'EST AU CLIENT QU'IL INCOMBE DE LE FAIRE TRADUIRE.**
- **NE PAS TENTER D'INTERVENTION SUR LES ÉQUIPEMENTS TANT QUE LE MANUEL SERVICE N'A PAS ÉTÉ CONSULTÉ ET COMPRIS.**
- **LE NON-RESPECT DE CET AVERTISSEMENT PEUT ENTRAÎNER CHEZ LE TECHNICIEN, L'OPÉRATEUR OU LE PATIENT DES BLESSURES DUES À DES DANGERS ÉLECTRIQUES, MÉCANIQUES OU AUTRES.**

WARNUNG

- **DIESES KUNDENDIENST–HANDBUCH EXISTIERT NUR IN ENGLISCHER SPRACHE.**
- **FALLS EIN FREMDER KUNDENDIENST EINE ANDERE SPRACHE BENÖTIGT, IST ES AUFGABE DES KUNDEN FÜR EINE ENTSPRECHENDE ÜBERSETZUNG ZU SORGEN.**
- **VERSUCHEN SIE NICHT, DAS GERÄT ZU REPARIEREN, BEVOR DIESES KUNDENDIENST–HANDBUCH ZU RATE GEZOGEN UND VERSTANDEN WURDE.**
- **WIRD DIESE WARNUNG NICHT BEACHTET, SO KANN ES ZU VERLETZUNGEN DES KUNDENDIENSTTECHNIKERS, DES BEDIENERS ODER DES PATIENTEN DURCH ELEKTRISCHE SCHLÄGE, MECHANISCHE ODER SONSTIGE GEFAHREN KOMMEN.**

AVISO

- **ESTE MANUAL DE SERVICIO SÓLO EXISTE EN INGLÉS.**
- **SI ALGÚN PROVEEDOR DE SERVICIOS AJENO A GEMS SOLICITA UN IDIOMA QUE NO SEA EL INGLÉS, ES RESPONSABILIDAD DEL CLIENTE OFRECER UN SERVICIO DE TRADUCCIÓN.**
- **NO SE DEBERÁ DAR SERVICIO TÉCNICO AL EQUIPO, SIN HABER CONSULTADO Y COMPRENDIDO ESTE MANUAL DE SERVICIO.**
- **LA NO OBSERVANCIA DEL PRESENTE AVISO PUEDE DAR LUGAR A QUE EL PROVEEDOR DE SERVICIOS, EL OPERADOR O EL PACIENTE SUFRAN LESIONES PROVOCADAS POR CAUSAS ELÉCTRICAS, MECÁNICAS O DE OTRA NATURALEZA.**

ATENÇÃO

- **ESTE MANUAL DE ASSISTÊNCIA TÉCNICA SÓ SE ENCONTRA DISPONÍVEL EM INGLÊS.**
- **SE QUALQUER OUTRO SERVIÇO DE ASSISTÊNCIA TÉCNICA, QUE NÃO A GEMS, SOLICITAR ESTES MANUAIS NOUTRO IDIOMA, É DA RESPONSABILIDADE DO CLIENTE FORNECER OS SERVIÇOS DE TRADUÇÃO.**
- **NÃO TENTE REPARAR O EQUIPAMENTO SEM TER CONSULTADO E COMPREENDIDO ESTE MANUAL DE ASSISTÊNCIA TÉCNICA.**
- **O NÃO CUMPRIMENTO DESTE AVISO PODE POR EM PERIGO A SEGURANÇA DO TÉCNICO, OPERADOR OU PACIENTE DEVIDO A‘ CHOQUES ELÉTRICOS, MECÂNICOS OU OUTROS.**

AVVERTENZA

- **IL PRESENTE MANUALE DI MANUTENZIONE È DISPONIBILE SOLTANTO IN INGLESE.**
- **SE UN ADDETTO ALLA MANUTENZIONE ESTERNO ALLA GEMS RICHIEDE IL MANUALE IN UNA LINGUA DIVERSA, IL CLIENTE È TENUTO A PROVVEDERE DIRETTAMENTE ALLA TRADUZIONE.**
- **SI PROCEDA ALLA MANUTENZIONE DELL’APPARECCHIATURA SOLO DOPO AVER CONSULTATO IL PRESENTE MANUALE ED AVERNE COMPRESO IL CONTENUTO.**
- **NON TENERE CONTO DELLA PRESENTE AVVERTENZA POTREBBE FAR COMPIERE OPERAZIONI DA CUI DERIVINO LESIONI ALL’ADDETTO ALLA MANUTENZIONE, ALL’UTILIZZATORE ED AL PAZIENTE PER FOLGORAZIONE ELETTRICA, PER URTI MECCANICI OD ALTRI RISCHI.**

警告

・このサービスマニュアルには英語版しかありません。
・ＧＥＭＳ以外でサービスを担当される業者が英語以外の言語を要求される場合、翻訳作業はその業者の責任で行うものとさせていただきます。
・このサービスマニュアルを熟読し理解せずに、装置のサービスを行わないで下さい。
・この警告に従わない場合、サービスを担当される方、操作員あるいは患者さんが、感電や機械的又はその他の危険により負傷する可能性があります。

注意:

- 本维修手册仅存有英文本。
- 非 GEMS 公司的维修员要求非英文本的维修手册时，客户需自行负责翻译。
- 未详细阅读和完全了解本手册之前，不得进行维修。
- 忽略本注意事项会对维修员，操作员或病人造成触电，机械伤害或其他伤害。

REVISION HISTORY

REV	DATE	PRIMARY REASON FOR CHANGE
1.	Sep 29, 2004	Initial Release
2	Apr 14, 2005	Overvew Tab – Sec 3: Added new acronyms and descriptions. System Tab – Added XW8200 host computer, removed CAN Link for ACGD, added HFD–S CAN Link, and other minor corrections. Operator Workspace Tab – Added XW8200 host computer and other minor corrections. Patient Handling Tab – Made minor corrections. Gradient Tab – Removed ACGD cabinet pages and inserted HFD–S Cabinet page. MGD/RRF/RF Tab – Corrected minor errors and added informational callouts. Added MRC II Tool & Cable and MRC II Tool – 8 Channel Connector pages.
3	Oct 15, 2005	System Tab – Added J116 and J119 to TAC Cabinet and relocated Terminator. Patient Handling Tab – Added test points and LED's to Magnet Enclosure and PHPS. Added MNS connection information to SSM. MGD/RRF/RF Tab – Added LED info to Exciter and Receiver boards. Corrected RRF Receive Chain connection labels. Added MNS connection info to Driver Module and SSM. Added MC Preamp Bias Filter pinouts. Added LED and Pinout info for 16 Ca'hannel Switch. Corrected MNS connection info on ASC Chassis. Revised and added interconnects for forward production and upgrade MNS options.
4	Mar 31, 2006	Major update to manual with the addition of HDx (Release 14.x) product. Changed title page and banners on all pages. Overvew Tab – Sec 3: Added new acronyms and descriptions. System Tab – Added HP9300 computer info, 32 Channel option info, and the new RFS cabinet power distribution using two power strips. Revised alll sheet references. OW Tab – Added HP9300 computer info. MGD/RRF/RF Tab – Added HDx (14.x) info as needed which includes VRE modules: ICN's, 16/24 Port Ethernet Switch, Infiniband board and module. Added HDx A, B, and C port connection information for the HDx LPCA. Added MCR III Tool
5	Jun 30, 2006	Overview Tab – Added definitions to Section 3. Added TOC's to System, Operator Workspace and Patient Handling Sections. System Tab – Added ASC Module to System/RFS cabinet depictions. Patient Handling Tab – Updated J20 Pin Signal table. Added SSM block diagram. MGD/RRF/RF Tab – Added 32 Channel information and other minor corrections and updates.
6	Oct 20, 2006	Added Environmental Sensor to System/RFS cabinet in System. Operator Workspace, and MGD/RRF/RF Sections (MRIhc19337). MGD/RRF/RF Tab –Added Port 2 to Port 2 connection for 4 ICN configuration. Added 4 ICN configuration without Infiniband switch. Updated Multi–Coil Adapter by adding MC Bias 17–24 for 14.x systems (MRIhc18216). Updated several pages with additional MC signal information (MRIhc18217).
7	Dec 20, 2006	SYSTEM TAB – Added 32 Channel configuration without Infiniband Switch. GRADIENT Tab – Added Pang block configuration info (MRIhc20731). OW TAB – Added Audio IN/OUT signals for PC Host for 14.x system. MGD/RRF/RF Tab – Revised ASC Chassis to reflect functionality using new Detector Board, 5251054.
8	Jun 6, 2007	SYSTEM Tab – Added note for designating components required for 16 channel systems. MGD/RRF/RF Tab –Added notes to designate parts not included with newer 8 Channel systems and for parts that are required for 16 Channel systems.
9	Oct 26, 2007	SYSTEM Tab – Added CAM Chassis designation to MGD Chassis where applicable. Added CAN LINK block diagram for RFS cabinet with CAM Chassis. MGD/RF/RRF Tab – Added board slot locations for CAM Chassis.
10	Sep 11, 2008	Changed title of manual and all page headers to *Signa HD, HDx & HDxt 1.5T (12.x, 14.x & 15.x) Block Diagrams & Supplemental Schematics.* HDi and Signa Vibrant are information is also included with this name change. Updates for HDxT (15.x) in all sections. Added information on Sun ICN's. Added depopulated 16–channel switch for 8–channel installations.
11	Dec 17, 2008	SYSTEM Tab – Added new environmental sensor diagram (ECO 2055310). PATIENT HANDLING Tab – Revised E–Stop circuit voltage from 24V to 12V in Teal PDU (PQR 13207104).
12	Jun 30, 2010	SYSTEM Tab – Added new Z400 computer page (ECO2056587) and added 5337894–3 and –4 ICN's (ECO 2101939). MGD/RRF/RF Tab – Added new ICN's (ECO 2101939).

LIST OF EFFECTIVE PAGES

PAGE	REV
Title Page	12
GE Logo Page	–
2128126	1*
A	12
i	10
OVERVIEW	
Tab MR367	–
i	10
1–1	10
2–1	10
3–1 to 3–6	10
SYSTEM	
Tab MR364	–
i	12
1–1 to 1–20	12
OPERATOR WORKSPACE	
Tab 2158195	–
i	10
1–1 to 1–8	10
PATIENT HANDLING	
Tab MR405	–
i	10
1–1 to 1–2	10
1–3 to 1–4	11
1–5 to 1–8	10
GRADIENT	
Tab MR418	–
1–1 to 1–3	10
PDU	
Tab MR406	–
i	10
MGD/RRF/RF	
Tab MR451	–
i to ii	10
1–1 to 1–2	10
1–3	12
1–4 to 1–44	10
2–1 to 2–12	10
COOLING SYSTEM	
Tab 2308173	–
i	10
1–1 to 1–2	10

* This revision number/letter corresponds to the indicated document's revision control system.

CONTENTS

OVERVIEW

Purpose
Standard Conventions
Abbreviations

SYSTEM

System Block Diagrams

OPERATOR WORKSPACE

Operator Workspace Block Diagrams

PATIENT HANDLING

Patient Handling Block Diagrams

GRADIENT

Gradient Block Diagrams (HFD & ACGD)

PDU

PDU Block Diagrams

Note:

Phoenix PDU found in Vendor Manuals only. (SEE Service Methods CDROM)

MGD/RRF/RF (1.5T)

MGD/RRF/RF Block Diagrams (1.5T)
RF Supplemental Schematics (1.5T)

COOLING SYSTEM

Water Chillers Block Diagrams

Note:

For all Chillers and Cooling System variations (SEE Vendor Manuals on MR Service Methods CDROM)

OVERVIEW

TABLE OF CONTENTS

SECTION	PAGE
1 – PURPOSE	1–1
2 – STANDARD CONVENTIONS	2–1
3 – ABBREVIATIONS	3–1

SECTION 1 – PURPOSE

The purpose of this document is to provide an overview of the hardware which makes up the MR Signa System, and a quick means to troubleshoot major signals within the system.

It is recommended that you page through this manual to become familiar with its content and organization, beginning with System Tab, OVERALL SYSTEM. This section shows how the major subsystems are grouped by cabinet, and the main communication lines between them.

The remaining block diagrams are organized into sections which correspond to major subsystems. Some diagrams show hardware from another subsystem in order to complete an entire signal flow route. For such exceptions, the board/module title of the circuitry shown will generally help identify the applicable subsystem. See Illustration 1–1 for tab organization of this manual.

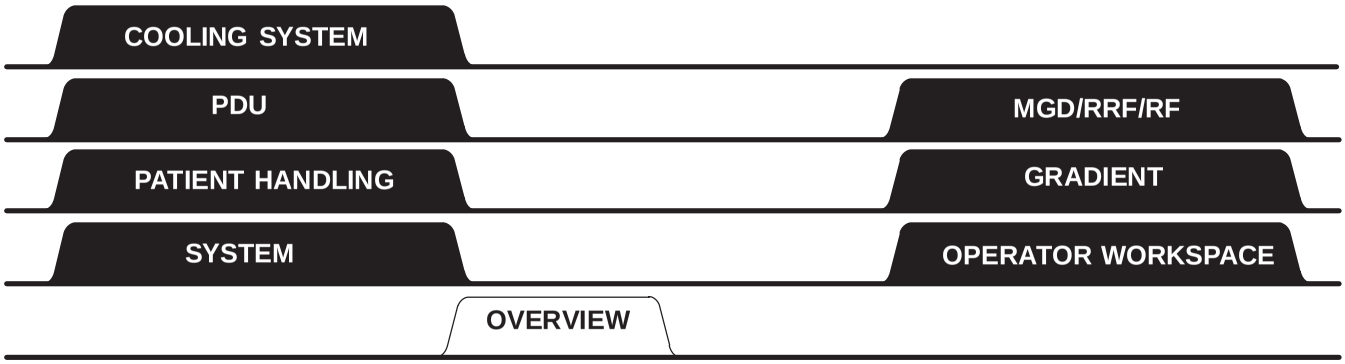

TAB ORGANIZATION FOR THIS DIRECTION
ILLUSTRATION 1

These block diagrams, along with provided diagnostics, are intended to be the primary tools for troubleshooting the MR System from a system or subsystem level on down to the specific module or board level. Since some of the RF subsystem block diagrams are presently insufficient for troubleshooting to the FRU (Field Replaceable Unit) level, schematics have been provided to supplement those block diagrams. When using the diagnostics, the block diagrams can provide a better understanding of what circuitry the diagnostics are testing, and how to further isolate a problem if required.

SECTION 2 – STANDARD CONVENTIONS

The following standard conventions are used within the block diagrams:

- The type of line used to enclose a major box on a block diagram indicates the following:

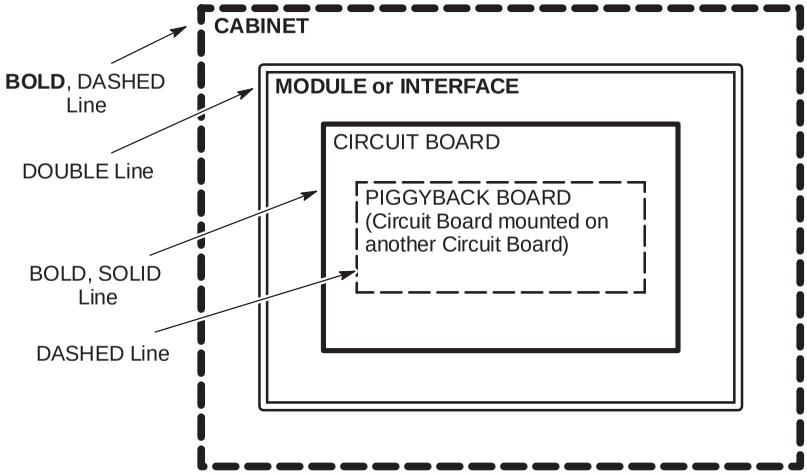

- The component designator for cabinets, modules, circuit boards, etc. is enclosed in "( )" after or below their name on the block diagram.
- Logic levels: A "0" indicates a logic "low" level (typ. <0.8VDC), a "1" indicates a logic "high" level (typ. > 2.0VDC).
- An "*" is used to identify an "active low" signal (e.g. "INT*" signal when at a logic "0" indicates that an interrupt is present; a logic "1" level indicates that no interrupt is present).
- A "#/" indicates the number of wires in a cable (e.g. —9/— indactes 9 wires).
- Signal flow is generally from left to right on a block diagram. Arrows are used to identify exceptions to this rule and to aid in identifying input/output signal lines on the diagram.
- The "x" symbol (e.g. ——x) shown on boxes in a block diagram are used to indicate that the function within the box is enabled by the "active" signal on this input line.

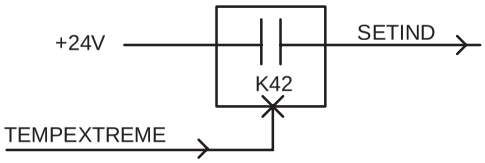

For this example, when signal TEMPEXTREME goes active ("1"), relay K42 will close (become enabled) and the signal SETIND now becomes active to set a temperature indicator.

SECTION 3 – ABBREVIATIONS

Note

This list has been compiled from a wide variety of sources. Not all of these abbreviations will apply to your system. For an electronic copy of over 1000 acronyms, see *Direction 2124201–2.*

A

AC = Alternating Current
ACGD = Advanced Concept Gradient Driver
ACK = Acknowledge
ACQ = Acquisition
A/D = Analog–to–Digital
ADC = Analog to Digital Converter
ADD or ADDR = Address
ADJ = Adjust
ADV = Advance
AGC = Automatic Gain Control
AGP = Applications Gateway Processor (Board)
AI = Applications Interface, Artificial Intelligence
ALGN = Align
ALU = Arithmetic Logic Unit
AM = Amplitude Modulation
AMP = ampere, amplifier
A/N = Alpha–numeric
ANSI = American National Standards Institute
ANT = Antenna
AP = Array Processor
APM = Analog Power Monitor
APS = Auto Pre–Scan or Acquisition Processing System (Board)
APSGT = Auto Pre–Scan Gain Control
ARCH = Archive/Remove Process
ASC = Automated Support Center or Amplifier Support Controller
ASCII = American Standard Code for Information Interchange
ASM or ASSY = Assembly
ASM = Analog Service Module
ATTEN = Attenuator
AUTO = Automatic
AUX = Auxiliary

B

B = magnetic field
BATT = Battery
BB = Buffered Data or Broadband
BC = Body Coil
BD = Board
BDS = Buffered Data Strobe
BLK = Black
BNC = BNC Connector
BRM = Body Resonance Module
BRT = Brightness
BUF = Buffer
B/W = BandWidth

C

C = centigrade, Celsius
CAB = Cabinet
CAL = Calibration
CALC = Calculate
CAN = Controller Area Network
CATTEN = Course Attenuation
CB = Circuit Breaker
CCC = CAN Core Controller card
CCW = Counter Clockwise
CD–ROM = Compact Disk Read–Only Memory
CE = Chip Enable
CF = Center Frequency
CFA = Center Frequency Adjust
CHAN or CHNL = Channel
CHK = Check
CKT = Circuit
CLR = Clear
CMD = Command
CMMR = Common Mode Rejection Ratio
CMOS = Complimentary Symmetry Metal Oxide Semiconductor
CMP = Compare or Compressor
CNT = Contrast
COAX = Coaxial
COF = Cut Off Frequency
CONFIG = Configuration
CONT = Continuous
CONV = Converter
CPD = Communication Pin Driver

CPU = Central Processing Unit
CRT = Cathode–Ray Tube
CTL = Clock Time Control
CTRL = Control
CV = Configuration Variable
CW = Clockwise or Controller Wave
CYL = Cylinder

D

D/A = Digital–to–Analog
DAC = Digital to Analog Converter
dB = Decibel
dBm = Decibels above or below one Milliwatt
DC = Direct Current
DCB = Driver Control Board
DCKSTP = Dock Stop
DD = Dynamic Disable
DDS = Direct Digital Synthesizer
DDSB = Dynamic Disable Switch Box
DEC = Decimal
DEG = Degree(s)
DEMUX = Demultiplexer
DEV = device
DIA = Diagnostic Imaging Accessories
DIAG = Diagnostic
DIFF = Differential
DIG = Digit
Dig B0 = Digital B0 Adjustment
DIP = Dual In–line Package
DIR = Direction
DIS = Disable
DM = Driver Module
DMA = Direct Memory Access
DMAC = Direct Memory Access Controller
DMM = Digital Multi–Meter
DPR or DPRAM = Dual Port Random Access Memory
DQA = Daily Quality Assurance
DRAM = Dynamic Random Access Memory
DRC = Dynamic Ram Controller
DRF = Digital Receive Filter (Board)
DRVR = Driver
DSP = Digital Signal Processor
DVM = Digital Volt Meter
DWG = Drawing

E

ECC = Extended Cursor Control or Error Checking and Correction
ECG = Electro–Cardiogram
EEPROM = Electrically Erasable Programmable Read Only Memory
EFB = Envelop Feedback
EPI = Echo Planer Imaging
e.g. = for example
EM or EMERG = Emergency
EMI = Electro–Magnetic Interference
EN or ENA = Enable
ENV = Envelope
EOS = End Of Sequence
EOT = End Of Travel
EOW = End Of Waveform
EPO = Emergency Power Off
EPROM = Erasable Programmable Read Only Memory
ERU = Emergency Rundown Unit
EXER = Exerciser
EXCITE = Expanding Applications with Multi–channel Imaging Technology

F

f = farad
F = Fahrenheit, Fuse (designator)
FBD = Functional Block Diagram
FBK = Feedback
FC = footcandle
Fc = Center Frequency
FDBK = Feedback
FDO = Future Delivery Order
FE = Field Engineer
FET = Field–Effect Transistor
FF or FIFO = First In – First Out
FFD = Full Field Distortion
FFT = Fast Fourier Transform
FID = Free Induction Decay
FIDAT = FIFO In Data
FIFO or FF = First In – First Out
FILT = Filter
FM = Frequency Modulated
FMI = Field Modification Instruction
FOV = Field Of View
FREQ = Frequency
FRNT = Front
FRU = Field Replaceable Unit
ft = foot
FT = Feet
FTP = File Transfer Protocol

G

G = gauss
G/A = Gradient Amplifier
GEN = Generator
GND = Ground
GOC AA = Global Operator Console Audio Assembly
GRAD = Gradient
GRN = Green
GRY = Grey
GP = Gradient Processor
GSW = Gradient Switch

H

H = henry
H = Hexadecimal
HART = Hardeware Tracker
HC = Head Coil
HD = Head or High Definition
He = Helium
He–ALARM = Helium Alarm
HEX = Hexadecimal
He–WARNING = Helium Warning
HFA = High Fidelity Amplifier
HFD = High Fidelity Driver
HFD–S = High Fidelity Driver – Special
HORIZ or HORZ = Horizontal
HPC = Hardware and Protocol Control
HPFS = Host Platform Software
hr = hour
HSN = High Speed Network
HSS (D) = High Speed Serial Data Link
HTR = Heater
HV = High Voltage
HV PSU = High Voltage Power Supply Unit
HVAC = Heating, Ventilation, & Air Conditioning
Hz = hertz

I

I = Current or Phase or Real
IAMP = Amplifier Current (Gradient)
ICD = Installation Certification Document
ICL = Coil Overcurrent (Gradient)
ICN = Image Compute Node
ID = inner diameter
ID = Identity, Identifier
i.e. = that is to say
IEC = International Electrical Code
IEEE = Institute of Electrical & Electronics Engineers
I/F = Interface
in. = inch
INFO = Information
INS, INST, or INSTR = Instruction
INT or INTR = Interrupt
I/O = Input/Output
IP = Image Processor or Plate Current (RF amp) or Instruction Processor or Internet Protocol
IPA = Intermediate Power Amplifier
IPC = Interprocess Communication
IQ = Image Quality
IR = Image Reject
IRF = Interface and Remote Functions (Board)
IRF I/O = Interface and Remote Functions Input/Output (Board)
IRQ = Interrupt Request
ISA = Interrupt Start Address
ISI = Inter–Sequence Interrupt
ISO = Isolator or Isolation
IT–MGD = Image Transfer–MDG (Board)
IT–Host = Image Transfer–Host (Board)
IVI = Interactive Vascular Imaging

J

J = Jack Connector (designator)
JP = Jumper

K

K = Kelvin (unit of temperature) or Kilo (Thousand)
KB = one thousand bytes of memory
KCal = kiloCalorie
kg = kilogram
kHz = kilohertz
KVA = kilo Volt Amperes
kW = Kilowatt

L

L or LFT = Left
LAN = Local Area Network
lb = pound
LBK = Loopback
LCA = Logic Cell Arrays
LED = Light Emitting Diode
LFC = Load From Cold
LHe =Liquid Helium
LIN = Linear
LM or LMK = Landmark
LMP = Lamp
LNK = Link
LPCA = Low Profile Carriage Assembly
LO = Local Oscillator
LOEP = List of Effective Pages
LONG = Longitudinal
LVLE = Low Voltage, Low Energy

M

m = meter
M = mega – one million
mA = millamps
MAG = Magnet
MB = megabyte
MC = Multi–Coil
MCD = Multi–Coil switch Driver
MCR = Multicoil Receive (Tool or Diagnostic)
MDS = Multidrop Serial interface
MEM = Memory
Mfg. = Manufacturing
MFU = Multi–Format Unit
MGD = Multi–Generational Data acquisition (Chassis)
MGMNT = Management
MHz = megahertz
mm = millimeter
MOD = Modifier
MON = Monitor
MOSFET = Metal Oxide Semiconductor Field Effect Transistor
MOV = Metal Oxide Varistor
MPS = Manual Pre–Scan
MR = Magnetic Resonance
MSG = Message
MTR = Motor
MUX = Multiplexer
mV = millivolts
MW = megawatt
mW = milliwatt

N

N = Negative
N2 = Nitrogen
n.c. = normally closed
NEC = National Electrical Code
Ni–Cad = Nickel Cadmium
n.o. = normally open
NO. = Number
NOPROC = No Processing
NOREC = No Reconstruction
nS = Nanosecond

O

O2 = oxygen
OC = Operator’s Console
OD = outside diameter
OM = Oxygen Monitor
OPI = Oblique Plane Imaging
OPTO = Optical
ORG = Orange
OT = Overtemp
OV = Over voltage
OVR = Over
OVRLD or OL = Overload
oz = ounce
OW = Operator Workspace

P

P = Positive
PA = Patient or Power Amplifier
PAC = Physiological Acquisition Controller
PAL = Programmable Array Logic or Patient Alignment Lights
PAN = Primary Archive Node
PAT = Patient
PCI = Programmable Communications Interface or Peripheral Component Interconnect
PCT = Pulse Controller Task
PDI = Product Delivery Instruction
PDU = Power Distribution Unit
PEN = Penetration
PHPS = Patient Handling Power Supply
PIN = Positive–Intrinsic–Negative
PIO = Programmed Input/Output
PLL = Phase Lock Loop
PIXEL = Picture Element
PM = Phase Modulation, or Planned Maintenance
PMC = PCI Mezzanine Connector
P/N = Positive/Negative
PNL = Panel
POS = Position
POT = Potentiometer
PP = Penetration Panel
PPC = Power PC
P–P = Peak to Peak
ppm = parts per million
PREAMP = Preamplifier
PROC = Process, Processor
PROG = Program, –ed, –able
PROM = Programmable Read Only Memory or Program
PS = Power Supply
PSD = Pulse Sequence Database
PSG = Pulse Sequence Generator
PSU = Power Supply Unit
PSS = Power Supply System Board
PT = Patient Transport or Patient Table
PUR = Purple
PVC = Polyvinylchloride

PW = Pulse Width
PWA = Printed Wiring Assembly
PWB = printed wiring board
PWR = Power

Q

Q = Quadrature, Quality Factor or Imaginary
Qty = Quantity
QUAD = Quadrature or Quadrant

R

R or RT = Right
RAM = Random Access Memory
RCV = Receive
RD = Read
RDY = Ready
RECON = Reconstruction
REF = Reference or Reflected
REG = Register or Regulator
RET or RTN = Return
REV = Revision or Reverse
RF = Radio Frequency
RFAMP = Radio Frequency Amplifier
RFA = RF Amplifier
RFI = Radio Frequency Interference or RF Interface (Module)
RFS = RF System Cabinet
RGB = Red Green Blue
RLA or RLY = Relay
rms = root mean square
ROI = Region of Interest
ROM = Read Only Memory
RPC = Remote Control Panel
RRF = Remote RF (Chassis)
RRF–DIF = Remote RF–Digital Interface board
RSR = Register
RST = Reset
R/W = Read/Write
RX = Receive
RXD = Receive Data

S

S = Switch (designator)
SACK = Slave Acknowledge
SAG = Sagittal
SAR = Specific Absorption Rate
S/C = Superconducting
SCA = Scan Control Assembly
SCP = Scan Control Processor (Board)
SCR = Silicon Controlled Rectifier
SCSI = Small Computer System Interface
SEC = second
SEG = Segment
SEL = Select
SEPI = Spin Echo Planer Imaging
SGA = Switchable Gradient Amplifier
SGI = Silicon Graphics Inc.
SIG = Signal
SII = “S–2” (type of magnet)
SIII = “S–3” (type of magnet)
SIMMS = Single In–line Memory Module
SIP = Single In–line Package
SL = Slice
SMC = Status Monitoring and Control
SMPTE = Society of Motion Picture and Television Engineers
SN = Service Note
SNR = Signal–to–Noise Ratio
SPI = Serial Peripheral Interface
SPT = System Performance Test
SPU = Signal Processing Unit
SRAM = Static Random Access Memory
SRF = Solid State RF Amplifier SGA or Scalable RF (Cabinet)
SRF/TRF = Sequencer Related Function / Trigger and Rotation Function (Board)
SRI = Scan Room Interface
SRV = Service
SSM = System Support Module
SSP = Sequence Synchronous Protocol
SST = Small Sample Test
STAB = Stability
STAT = Status
STD = Standard
STD DEV = Standard Deviation
STIF Bd = SRF/TRF InterFace Board
SUB–D = Subminiature D (connector)
SW = Switch or Software
S/W = Software
SYNC = Synchronous
SYS = System
SYSID = System Identification

T

T = tesla
TAC = Twin Accessory Cabinet
TBD = To Be Determined
TBL = Table
TEMP = Temperature
TFU = Thyristor Firing Unit
TG = Transmit Gain
TGWC = TwinSpeed Gradient Water Cooler
TNS = Transient Noise Suppressor
TP = Test Point (designator)
TR or T/R = Transmit–Receive
TRMAP = Transmit/Receive Map
TRM = Twin Coil Resonator Module
TS = Terminal Strip
TSCC = TwinSpeed Cooling Cabinet
TST = Test
TTL = Transistor to Transistor Logic
TX = Transmit
TXD = Transmit Data

U

UART = Universal Asynchronous Receiver–Transmitter
uf = microfarad
UFI = Ultra Fast Imaging
UNBLK = Unblank
uP = Microprocessor
UPLMT = Up Limit
UPM = Universal Power Monitor
USART = Universal Synchronous/Asynchronous Receiver–Transmitter
uS or usec = microsecond
UTNS = Universal Transient Noise Suppressor (Board)
UV = Under voltage

V

VAC = Volts Alternating Current
VAR = Variable
VBUS = Bus Voltage
VCR = Video Cassette Recorder
VCNTRL = Control Voltage for 8645 Techrons
VDC = Volts Direct Current
VERT = Vertical
Vp–p = Volts Peak–to–Peak
VRE = Volume Recon Engine
VRMS = Volts, Root Mean Square
VTR = Video Tape Recorder

W

WARP = Waveform And Rotation Processor
WC = Water Chiller
WR = Write
WHT = White
WIM = Workspace Interface Module
WND = Window
WORM = Write Once Read Many
WRT = Write

X

XCVR = Transceiver
XFMR = Transformer
XMT or XMIT = Transmit

Y

YEL = Yellow

SYSTEM

TABLE OF CONTENTS

SECTION	PAGE
HD OVERALL SYSTEM – OPERATOR WORKSPACE CABINET w/8000 & TABLE (Forward Production or Pre–EXCITE to HD Upgrades)	1–1
HD OVERALL SYSTEM – OPERATOR WORKSPACE CABINET w/8000 & TABLE (EXCITE to HD Upgrades)	1–2
HD OVERALL SYSTEM – OPERATOR WORKSPACE CABINET w/8200 &TABLE (Forward Production or Pre–EXCITE to HDx Upgrades)	1–3
HDx & HDxt OVERALL SYSTEM – OPERATOR WORKSPACE CABINETw/9300 & TABLE (Forward Production, EXCITE, or Pre–EXCITE Upgrades)	1–4
HDx & HDxt OVERALL SYSTEM – OPERATOR WORKSPACE CABINETw/9300 & TABLE (EXCITE HD to HDx Upgrades)	1–5
HDx & HDxt OVERALL SYSTEM – OPERATOR WORKSPACE CABINETw/Z400 & TABLE (EXCITE HD to HDx Upgrades)	1–6
HD OVERALL SYSTEM – 4 or 8 Channel	1–8
HD OVERALL SYSTEM – 16 Channel	1–9
HDx & HDxt OVERALL SYSTEM – 8 Channel	1–10
HDx & HDxt OVERALL SYSTEM – 16 Channel	1–11
HDx & HDxt OVERALL SYSTEM – 32 Channel with Infiniband Switch	1–12
HDx & HDxt OVERALL SYSTEM – 32 Channel without Infiniband Switch	1–13
HDx & HDxt OVERALL SYSTEM – 32 Channel	1–14
HD, HDx & HDxt OVERALL SYSTEM (Forward Production & Upgrades)	1–15
HD, HDx & HDxt OVERALL SYSTEM (Forward Production & Upgrades)	1–16
HD, HDx & HDxt OVERALL SYSTEM – 4, 8, or 16 Channel (HD Forward Production or HDx Upgrades)	1–17
HDx & HDxt OVERALL SYSTEM – 8 or 16 Channel (HDx Forward Production)	1–18
HDx & HDxt OVERALL SYSTEM – 32 Channel	1–19
HD & HDx & HDxt OVERALL SYSTEM – CAN Link Block Diagrams	1–20

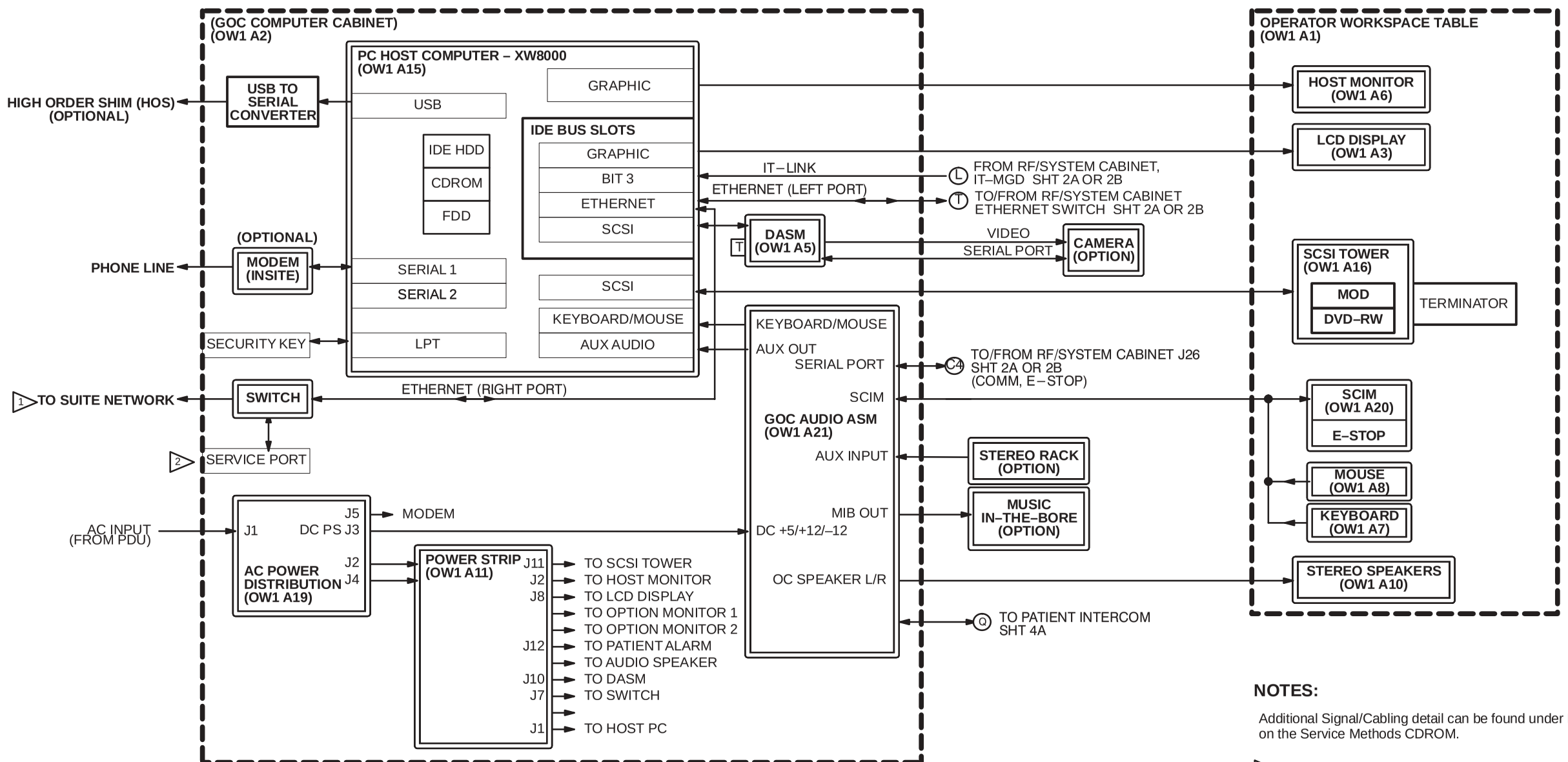

NOTES:

Additional Signal/Cabling detail can be found under Interconnects on the Service Methods CDROM.

1 Network connection available for external suite connection

2 Network connection available at front of goc assembly for the service laptop

Refer to the following functional block diagram for additional information:

NOTE:
1) PATIENT HANDLING
2) MGD/RRF/RF

EXCITE HD (12.x) OVERALL SYSTEM
Forward Production or Pre–EXCITE to HD Upgrades
(OPERATOR WORKSPACE CABINET w/8000 & TABLE)
SHEET 1A OF 5

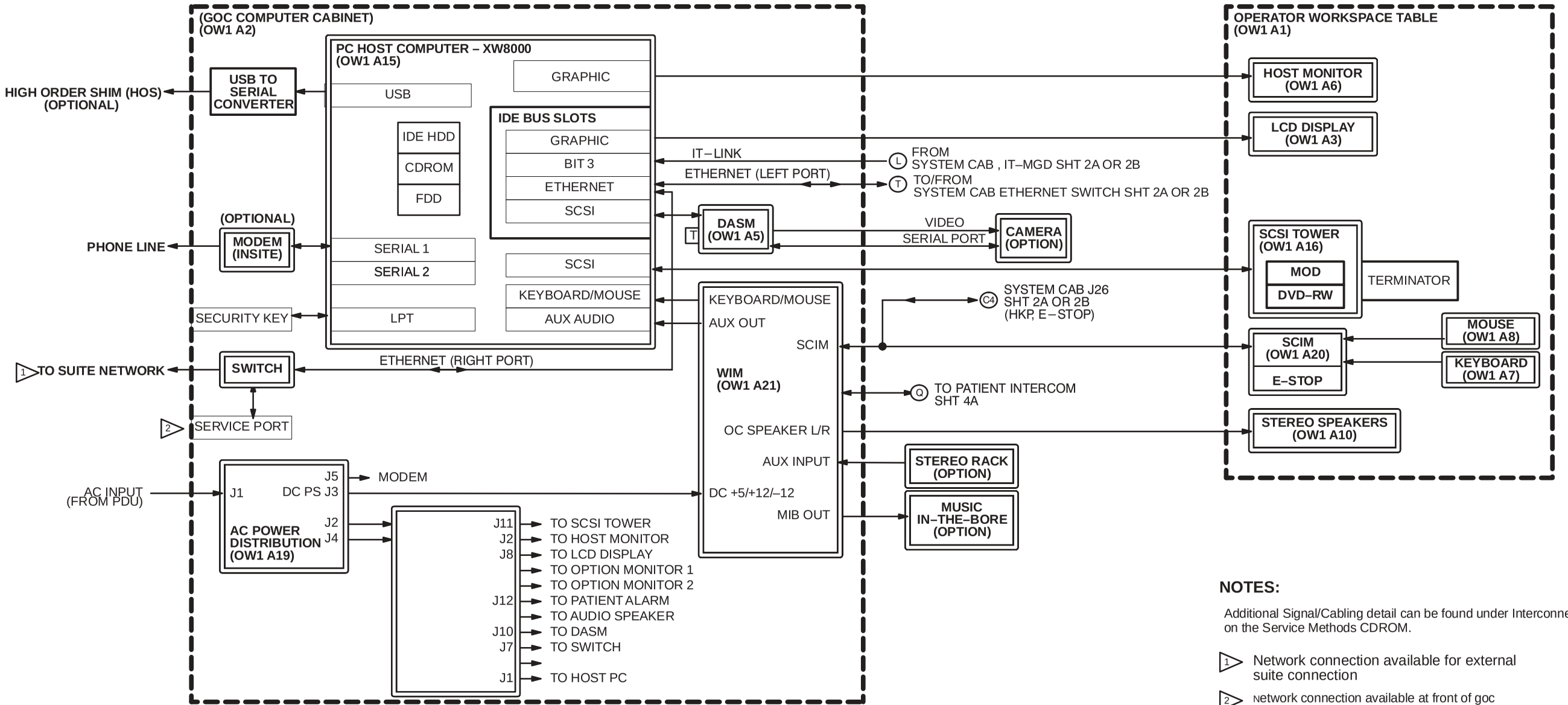

NOTES:

Additional Signal/Cabling detail can be found under Interconnects on the Service Methods CDROM.

1 Network connection available for external suite connection

2 Network connection available at front of goc assembly for the service laptop

Refer to the following functional block diagram for additional information:

NOTE:
1) PATIENT HANDLING
2) MGD/RRF/RF

EXCITE HD (12.x) OVERALL SYSTEM
EXCITE to HD Upgrades
(OPERATOR WORKSPACE CABINET w/8000 & TABLE)
SHEET 1B OF 5

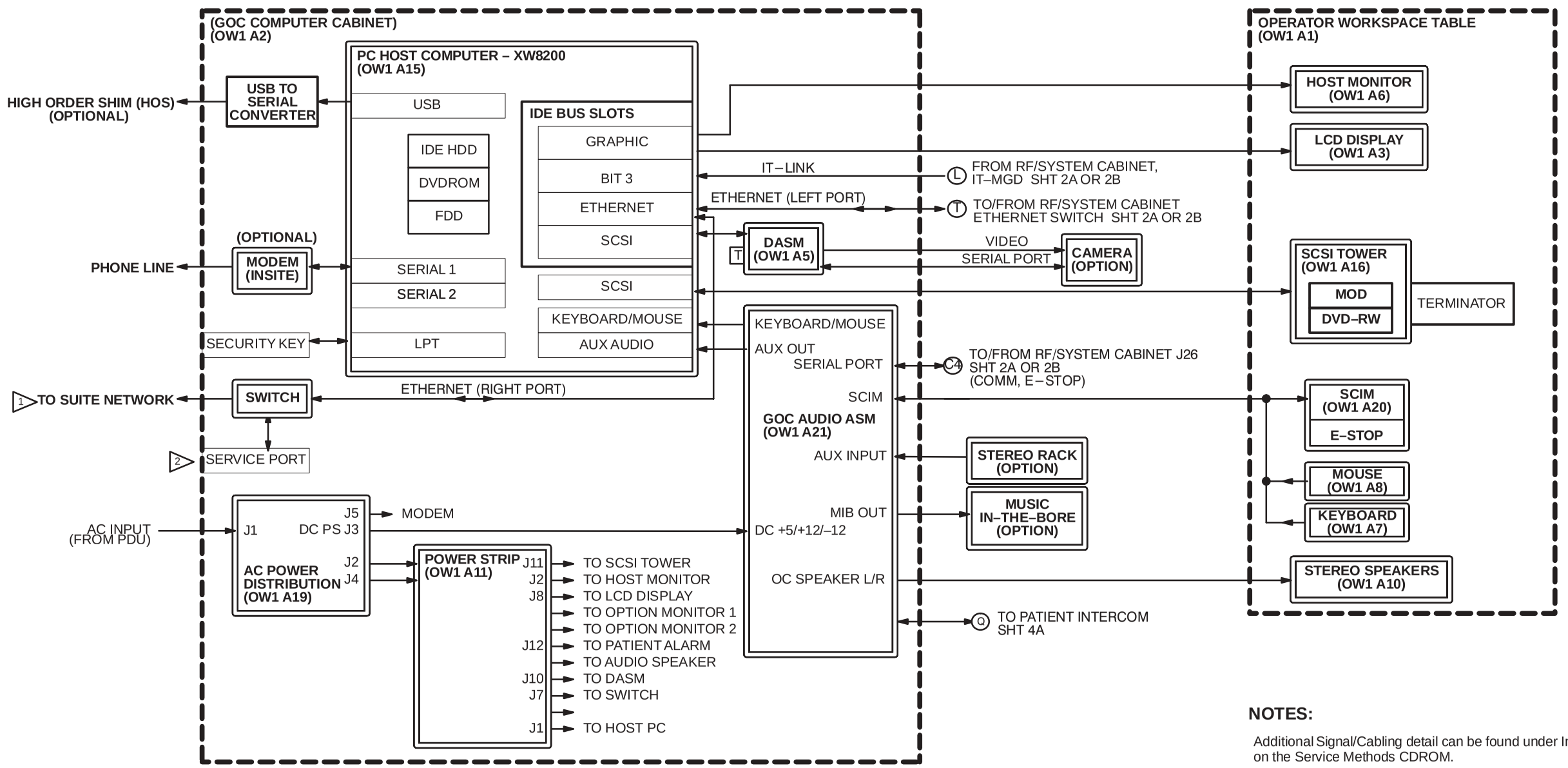

NOTES:

Additional Signal/Cabling detail can be found under Interconnects on the Service Methods CDROM.

1 Network connection available for external suite connection

2 Network connection available at front of goc assembly for the service laptop

Refer to the following functional block diagram for additional information:

NOTE:
1) PATIENT HANDLING
2) MGD/RRF/RF

EXCITE HD (12.x) OVERALL SYSTEM
Forward Production or Pre–EXCITE to HD Upgrades
(OPERATOR WORKSPACE CABINET w/8200 & TABLE)
SHEET 1C OF 5

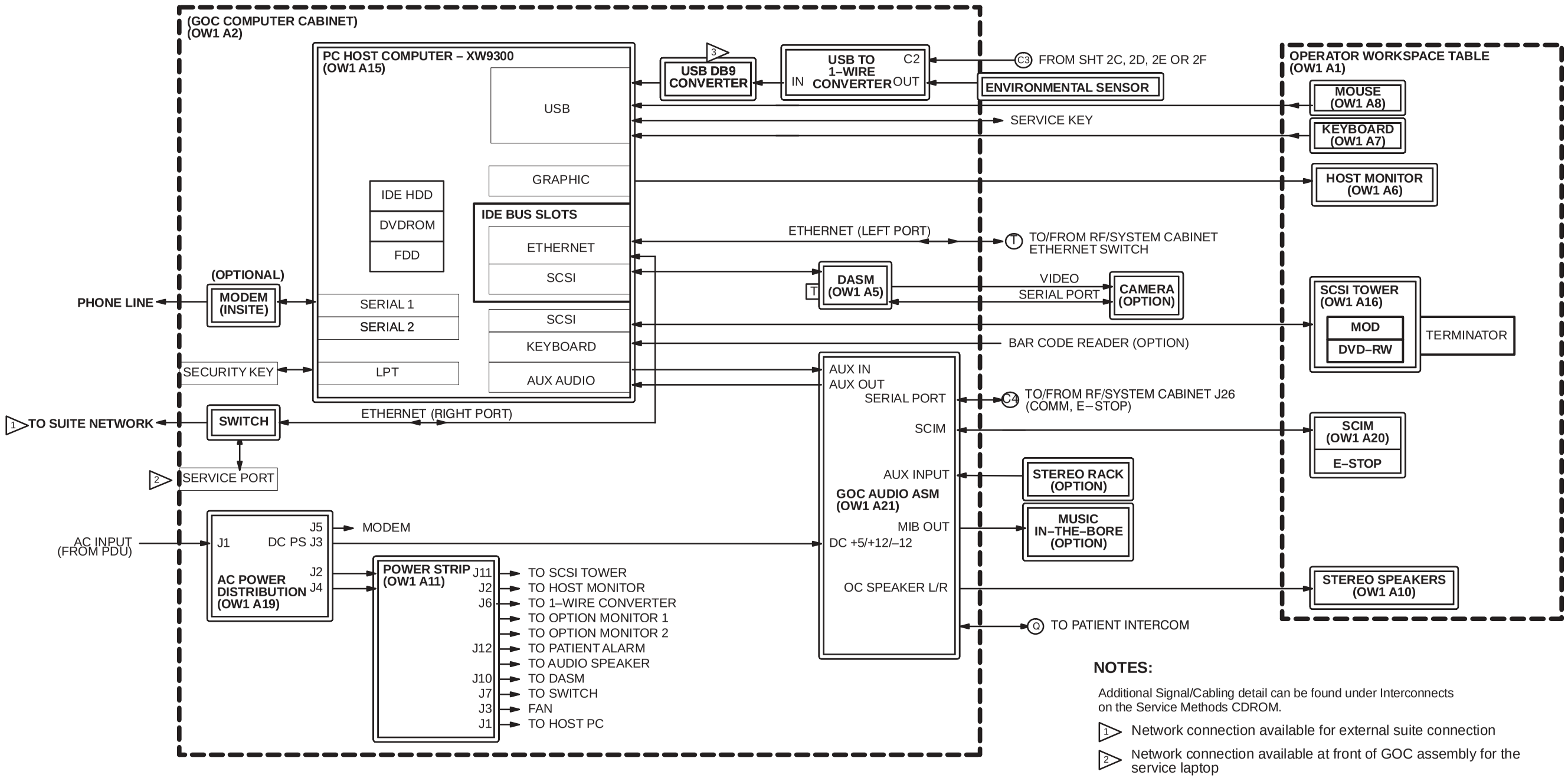

NOTES:

Additional Signal/Cabling detail can be found under Interconnects on the Service Methods CDROM.

1. Network connection available for external suite connection
2. Network connection available at front of GOC assembly for the service laptop
3. Beginning August 2008, design changed to 1–wire to USB converter.

Environmental Sensors Block Diagram utilizing 1–wire 5147136–2

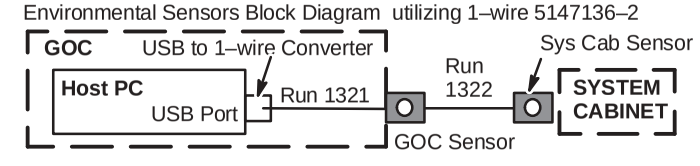

Refer to the following functional block diagram for additional information:

NOTE:
1) PATIENT HANDLING
2) MGD/RRF/RF

HDx (14.x) & HDxt (15.x) OVERALL SYSTEM
Forward Production, EXCITE, or Pre–EXCITE to HDx Upgrades
(OPERATOR WORKSPACE CABINET w/9300 & TABLE)
SHEET 1D OF 5

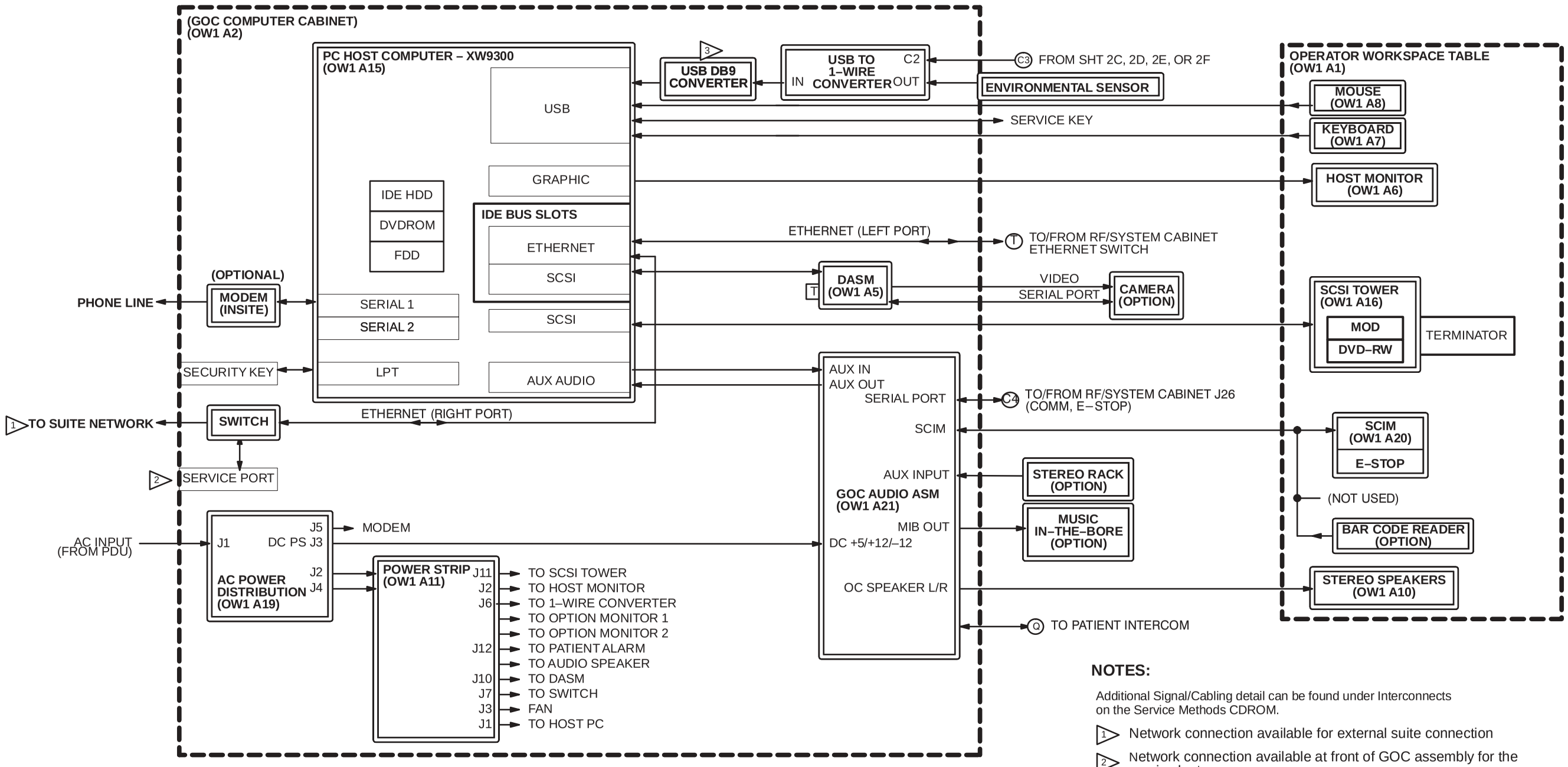

NOTES:

Additional Signal/Cabling detail can be found under Interconnects on the Service Methods CDROM.

1. Network connection available for external suite connection
2. Network connection available at front of GOC assembly for the service laptop
3. Beginning August 2008, design changed to 1–wire to USB converter.

Environmental Sensors Block Diagram utilizing 1–wire 5147136–2

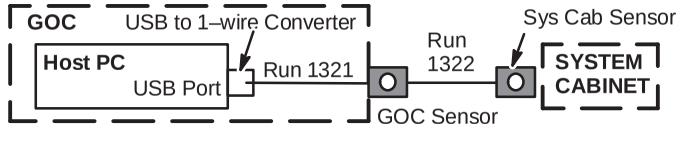

Refer to the following functional block diagram for additional information:

NOTE:
1) PATIENT HANDLING
2) MGD/RRF/RF

HDx (14.x) & HDxt (15.x) OVERALL SYSTEM
EXCITE HD to HDx Upgrades
(OPERATOR WORKSPACE CABINET w/9300 & TABLE)
SHEET 1E OF 5

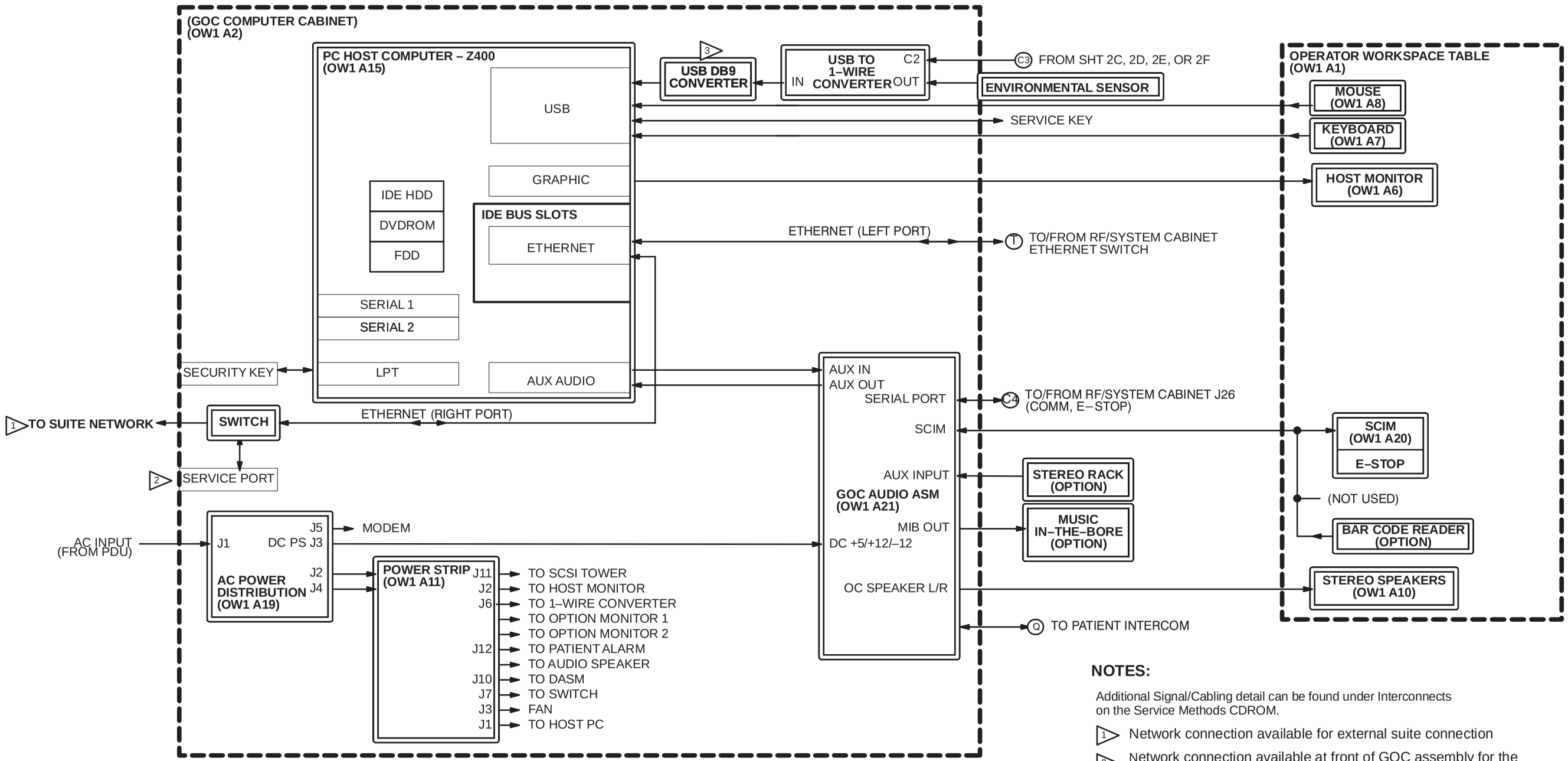

NOTES:

Additional Signal/Cabling detail can be found under Interconnects on the Service Methods CDROM.

1. Network connection available for external suite connection
2. Network connection available at front of GOC assembly for the service laptop
3. Beginning August 2008, design changed to 1–wire to USB converter.

Environmental Sensors Block Diagram utilizing 1–wire 5147136–2

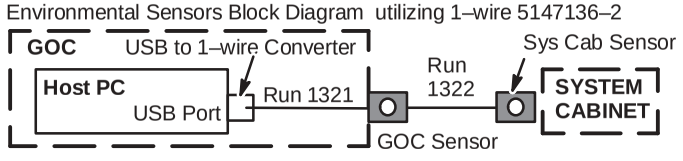

Refer to the following functional block diagram for additional information:

NOTE:
1) PATIENT HANDLING
2) MGD/RRF/RF

HDx (14.x) & HDxt (15.x) OVERALL SYSTEM
EXCITE HD to HDx Upgrades
(OPERATOR WORKSPACE CABINET w/Z400 & TABLE)
SHEET 1F OF 5

This page left blank intentionally

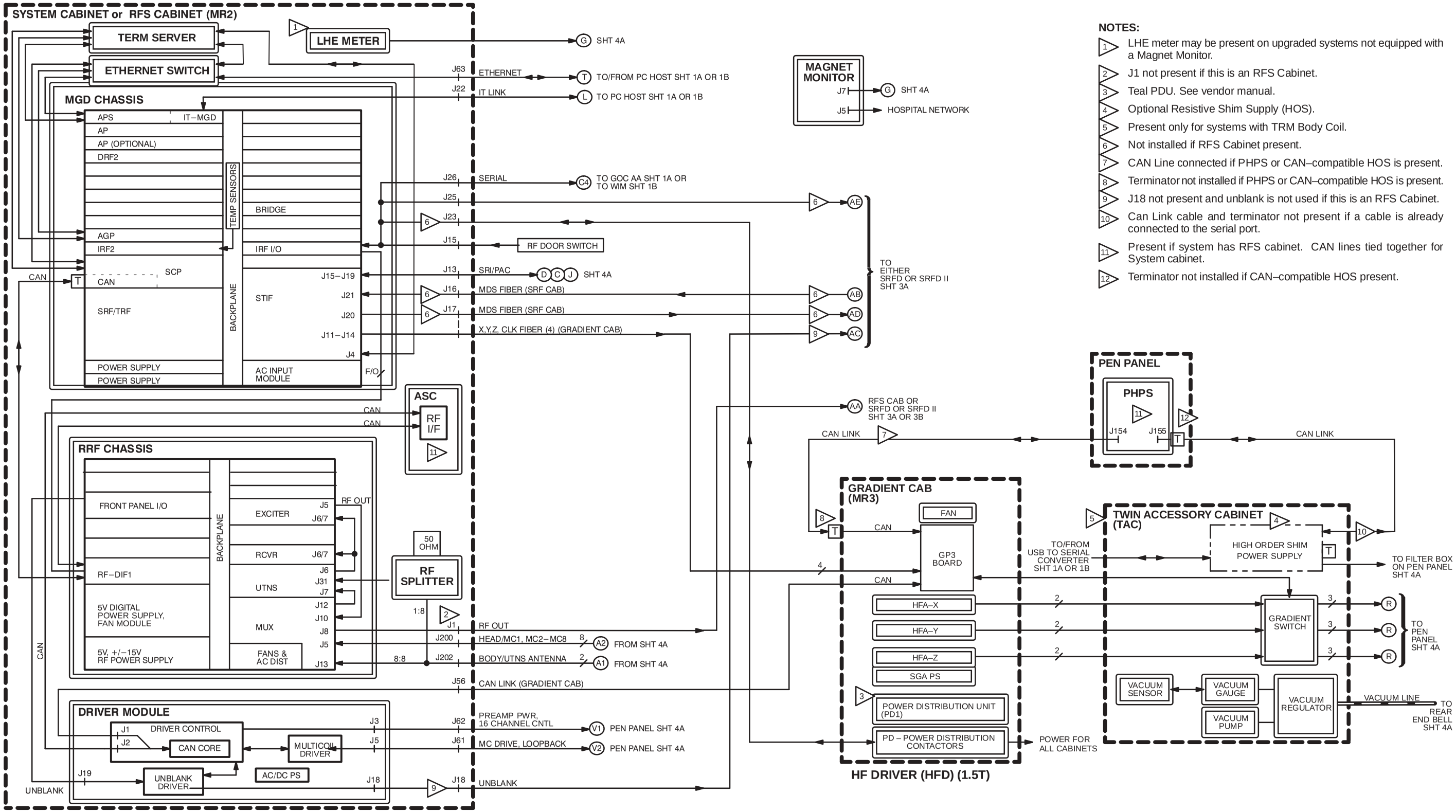

NOTES:

1. LHE meter may be present on upgraded systems not equipped with a Magnet Monitor.
2. J1 not present if this is an RFS Cabinet.
3. Teal PDU. See vendor manual.
4. Optional Resistive Shim Supply (HOS).
5. Present only for systems with TRM Body Coil.
6. Not installed if RFS Cabinet present.
7. CAN Line connected if PHPS or CAN–compatible HOS is present.
8. Terminator not installed if PHPS or CAN–compatible HOS is present.
9. J18 not present and unblank is not used if this is an RFS Cabinet.
10. Can Link cable and terminator not present if a cable is already connected to the serial port.
11. Present if system has RFS cabinet. CAN lines tied together for System cabinet.
12. Terminator not installed if CAN–compatible HOS present.

EXCITE HD (12.x) OVERALL SYSTEM – 4 Channel or 8 Channel
(ONLY MAIN COMMUNICATION LINES SHOWN)
SHEET 2A 0F 5

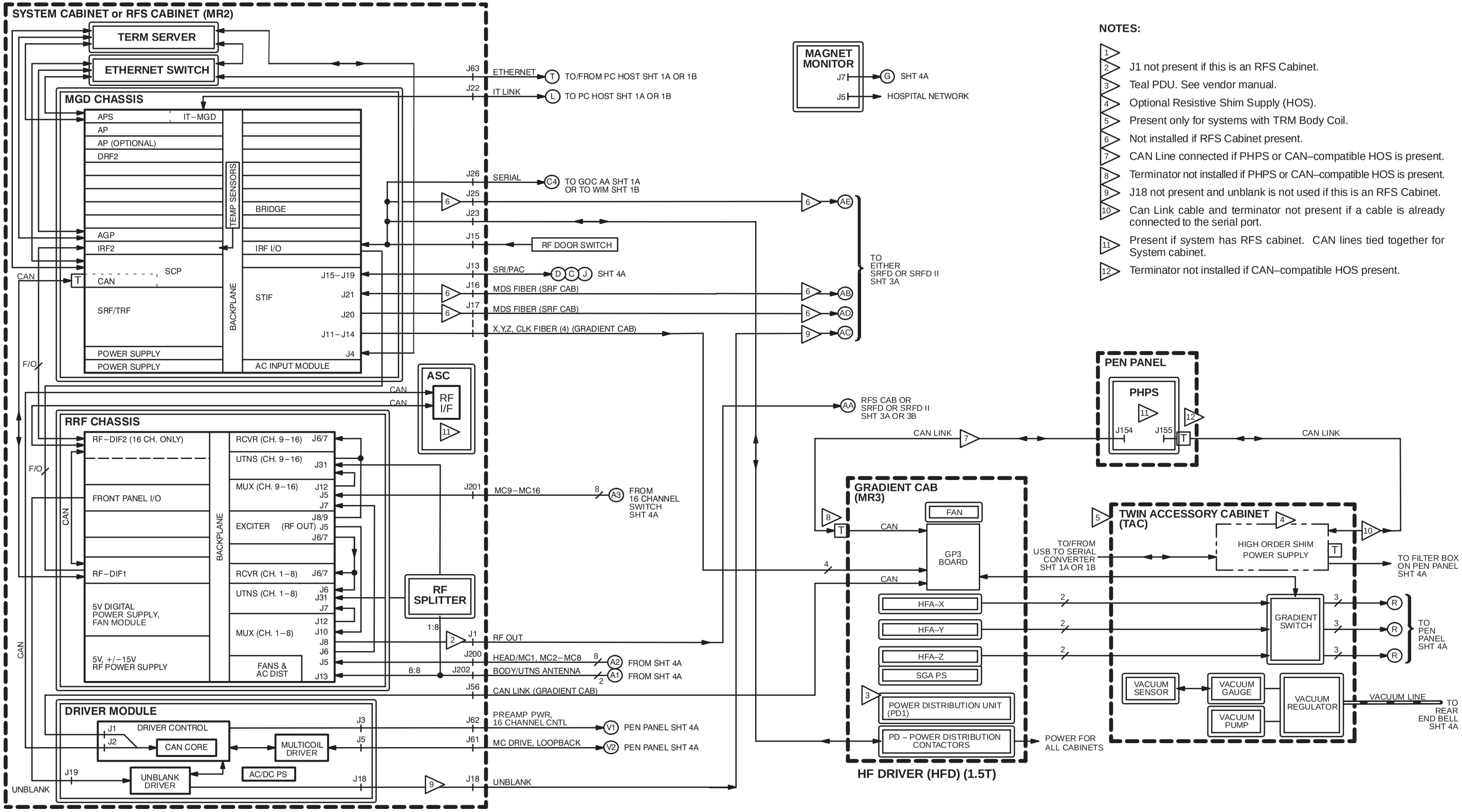

NOTES:

1.
2. J1 not present if this is an RFS Cabinet.
3. Teal PDU. See vendor manual.
4. Optional Resistive Shim Supply (HOS).
5. Present only for systems with TRM Body Coil.
6. Not installed if RFS Cabinet present.
7. CAN Line connected if PHPS or CAN–compatible HOS is present.
8. Terminator not installed if PHPS or CAN–compatible HOS is present.
9. J18 not present and unblank is not used if this is an RFS Cabinet.
10. Can Link cable and terminator not present if a cable is already connected to the serial port.
11. Present if system has RFS cabinet. CAN lines tied together for System cabinet.
12. Terminator not installed if CAN–compatible HOS present.

EXCITE HD (12.x) OVERALL SYSTEM – 16 Channels
(ONLY MAIN COMMUNICATION LINES SHOWN)
SHEET 2B 0F 5

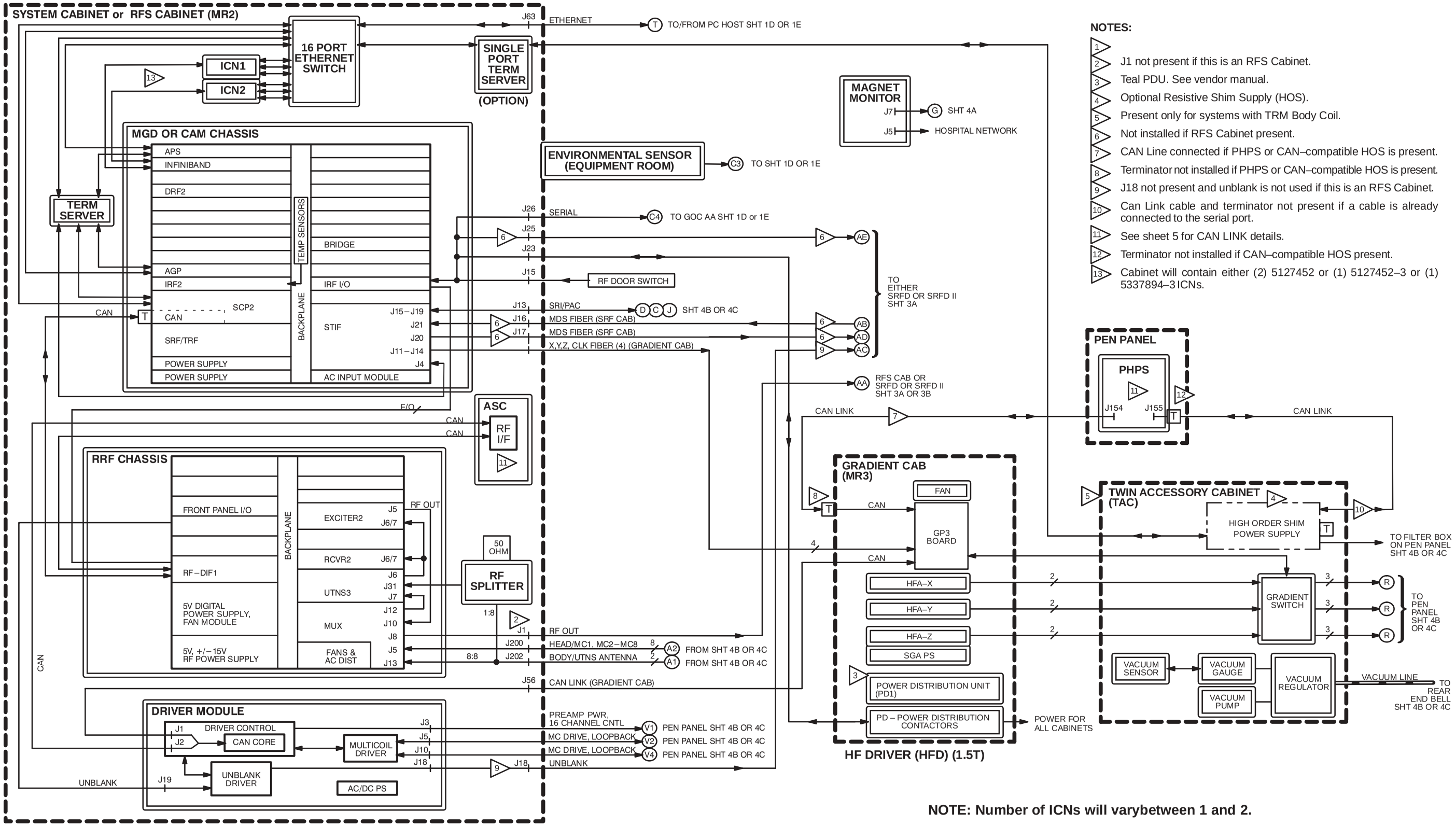

NOTES:

1.
2. J1 not present if this is an RFS Cabinet.
3. Teal PDU. See vendor manual.
4. Optional Resistive Shim Supply (HOS).
5. Present only for systems with TRM Body Coil.
6. Not installed if RFS Cabinet present.
7. CAN Line connected if PHPS or CAN–compatible HOS is present.
8. Terminator not installed if PHPS or CAN–compatible HOS is present.
9. J18 not present and unblank is not used if this is an RFS Cabinet.
10. Can Link cable and terminator not present if a cable is already connected to the serial port.
11. See sheet 5 for CAN LINK details.
12. Terminator not installed if CAN–compatible HOS present.
13. Cabinet will contain either (2) 5127452 or (1) 5127452–3 or (1) 5337894–3 ICNs.

NOTE: Number of ICNs will varybetween 1 and 2.

HDx (14.x) & HDxt (15.x) OVERALL SYSTEM – 8 Channel
(ONLY MAIN COMMUNICATION LINES SHOWN)
SHEET 2C 0F 5

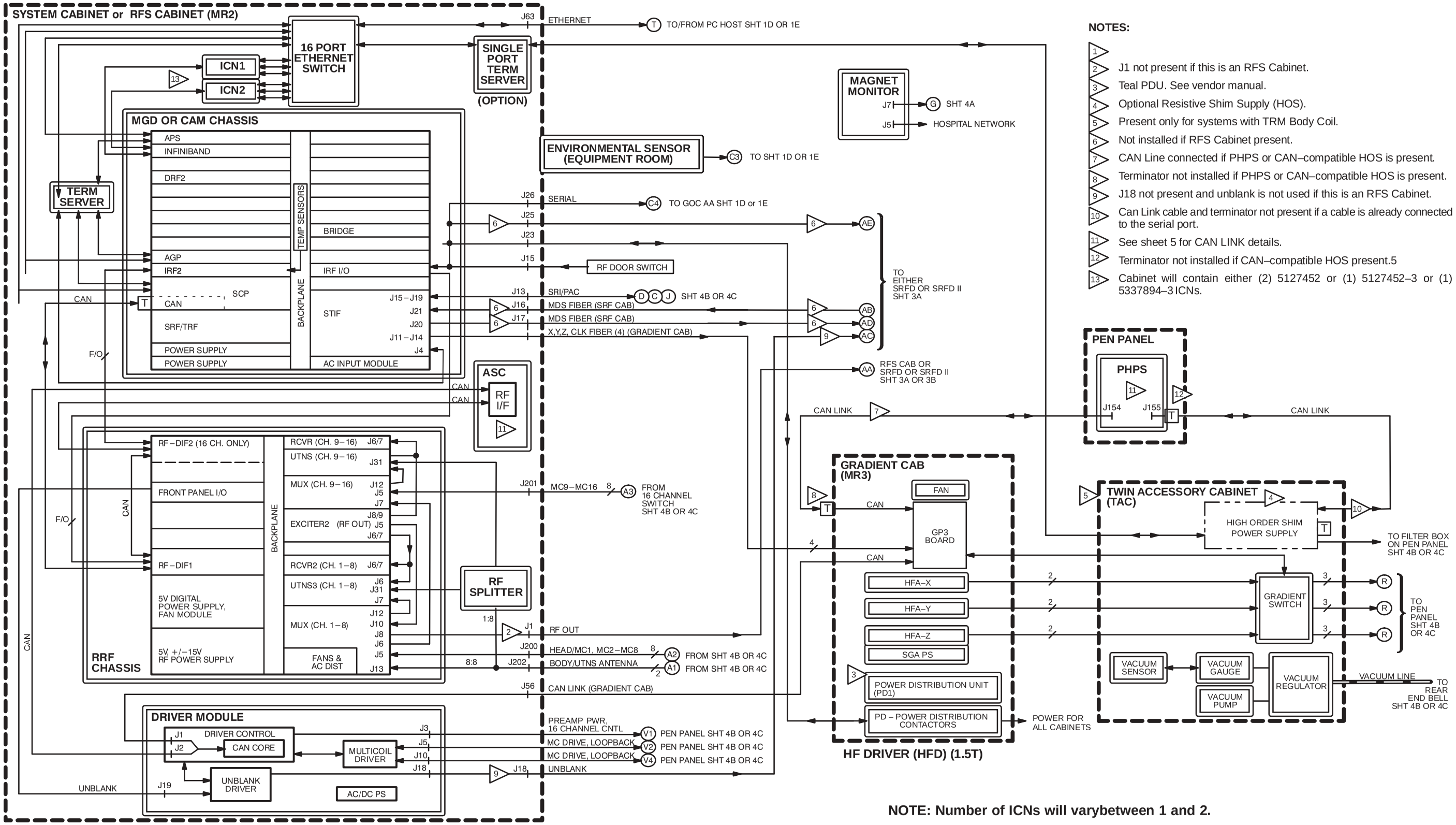

NOTES:

1. J1 not present if this is an RFS Cabinet.
2. Teal PDU. See vendor manual.
3. Optional Resistive Shim Supply (HOS).
4. Present only for systems with TRM Body Coil.
5. Not installed if RFS Cabinet present.
6. CAN Line connected if PHPS or CAN–compatible HOS is present.
7. Terminator not installed if PHPS or CAN–compatible HOS is present.
8. J18 not present and unblank is not used if this is an RFS Cabinet.
9. Can Link cable and terminator not present if a cable is already connected to the serial port.
10. See sheet 5 for CAN LINK details.
11. Terminator not installed if CAN–compatible HOS present.5
12. Cabinet will contain either (2) 5127452 or (1) 5127452–3 or (1) 5337894–3 ICNs.
13. Cabinet will contain either (2) 5127452 or (1) 5127452–3 or (1) 5337894–3 ICNs.

NOTE: Number of ICNs will varybetween 1 and 2.

HDx (14.x) & HDxt (15.x) OVERALL SYSTEM – 16 Channel
(ONLY MAIN COMMUNICATION LINES SHOWN)
SHEET 2D 0F 5

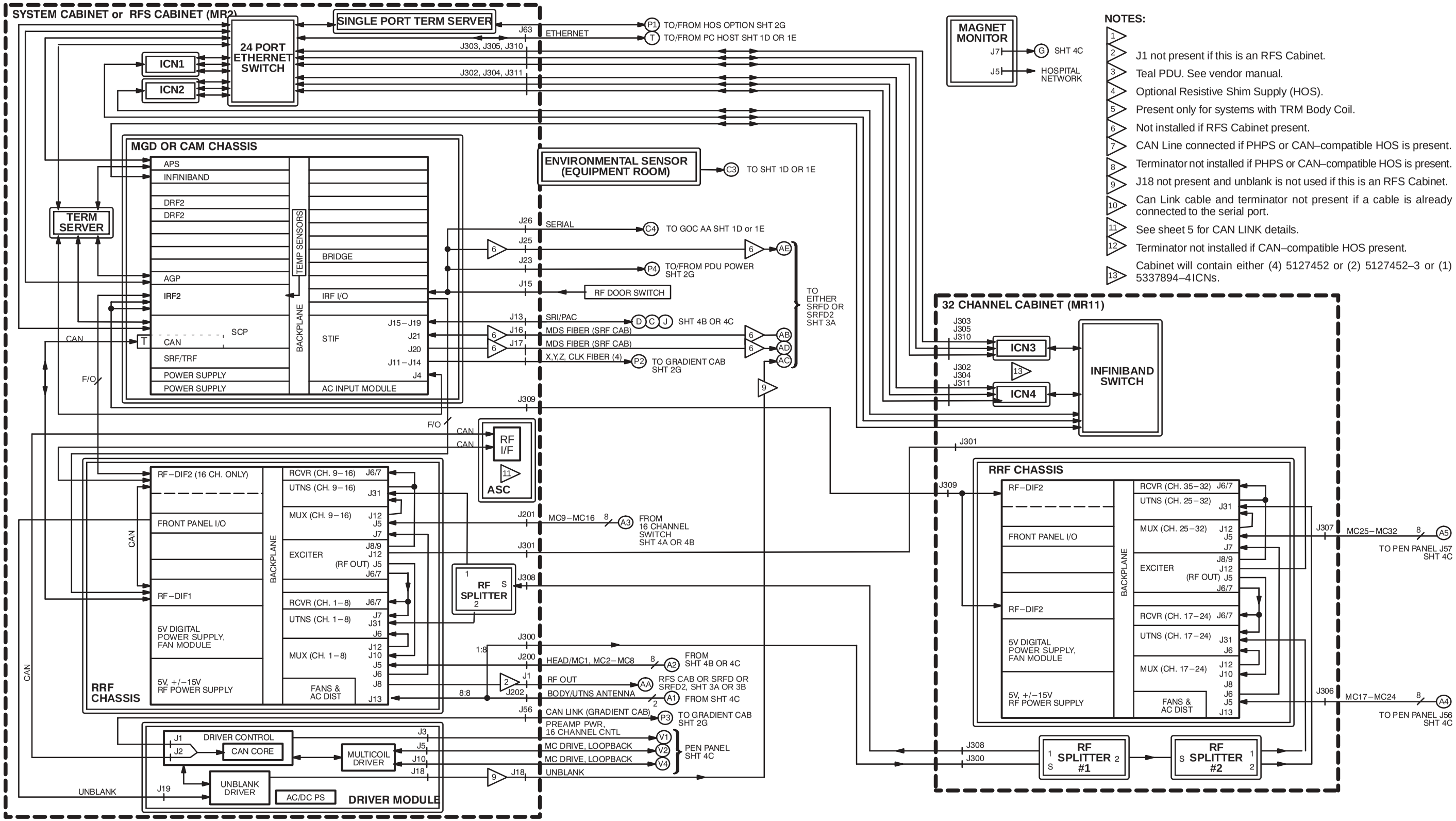

HDx (14.x) & HDxt (15.x) OVERALL SYSTEM – 32 Channel with Infinband Switch
(ONLY MAIN COMMUNICATION LINES SHOWN)
SHEET 2E 0F 5

NOTE: Number of ICNs will varybetween 1, 2 or 4.

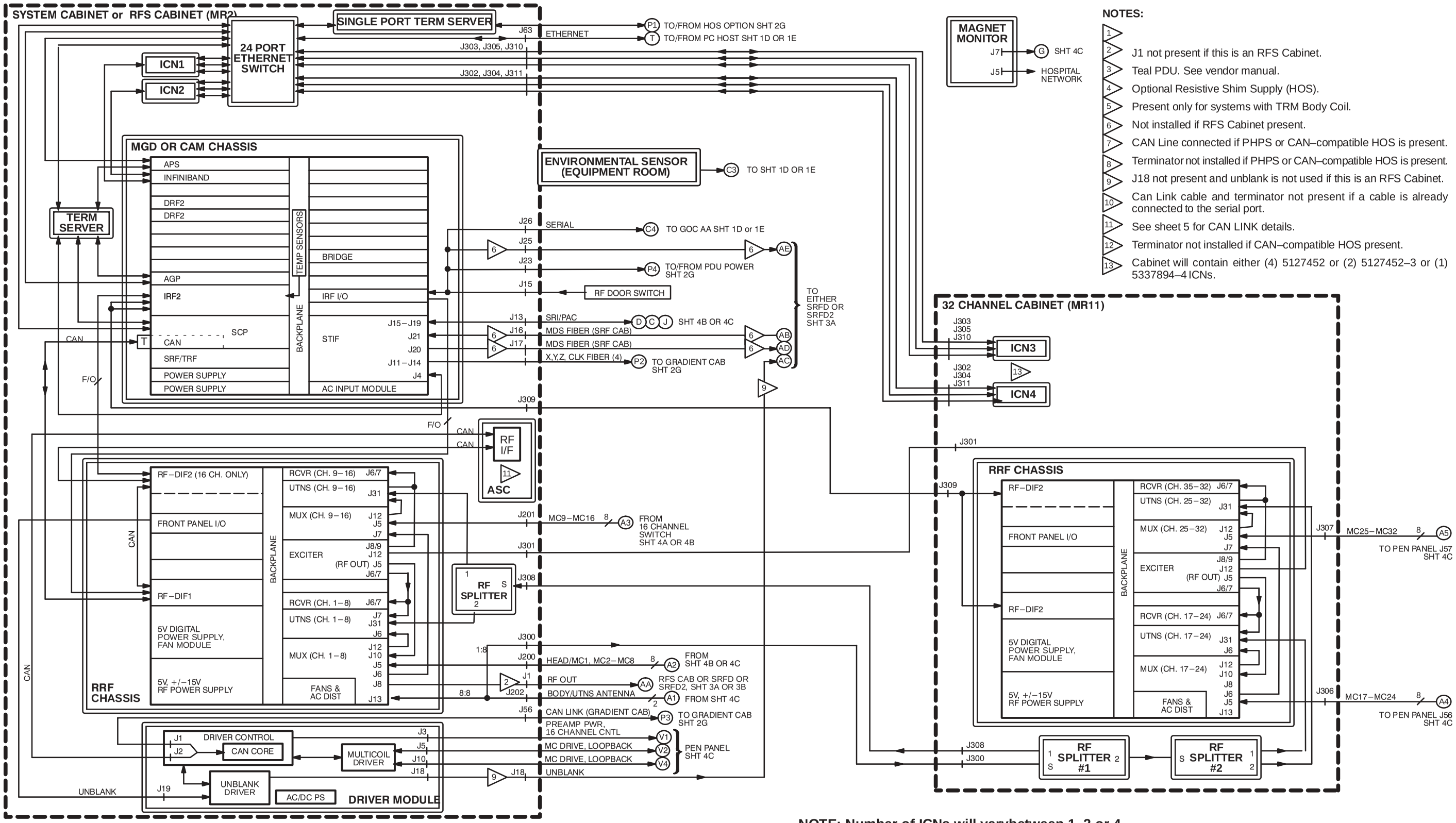

HDx (14.x) & HDxt (15.x) OVERALL SYSTEM – 32 Channel without Infinband Switch
(ONLY MAIN COMMUNICATION LINES SHOWN)
SHEET 2F 0F 5

NOTE: Number of ICNs will varybetween 1, 2 or 4.

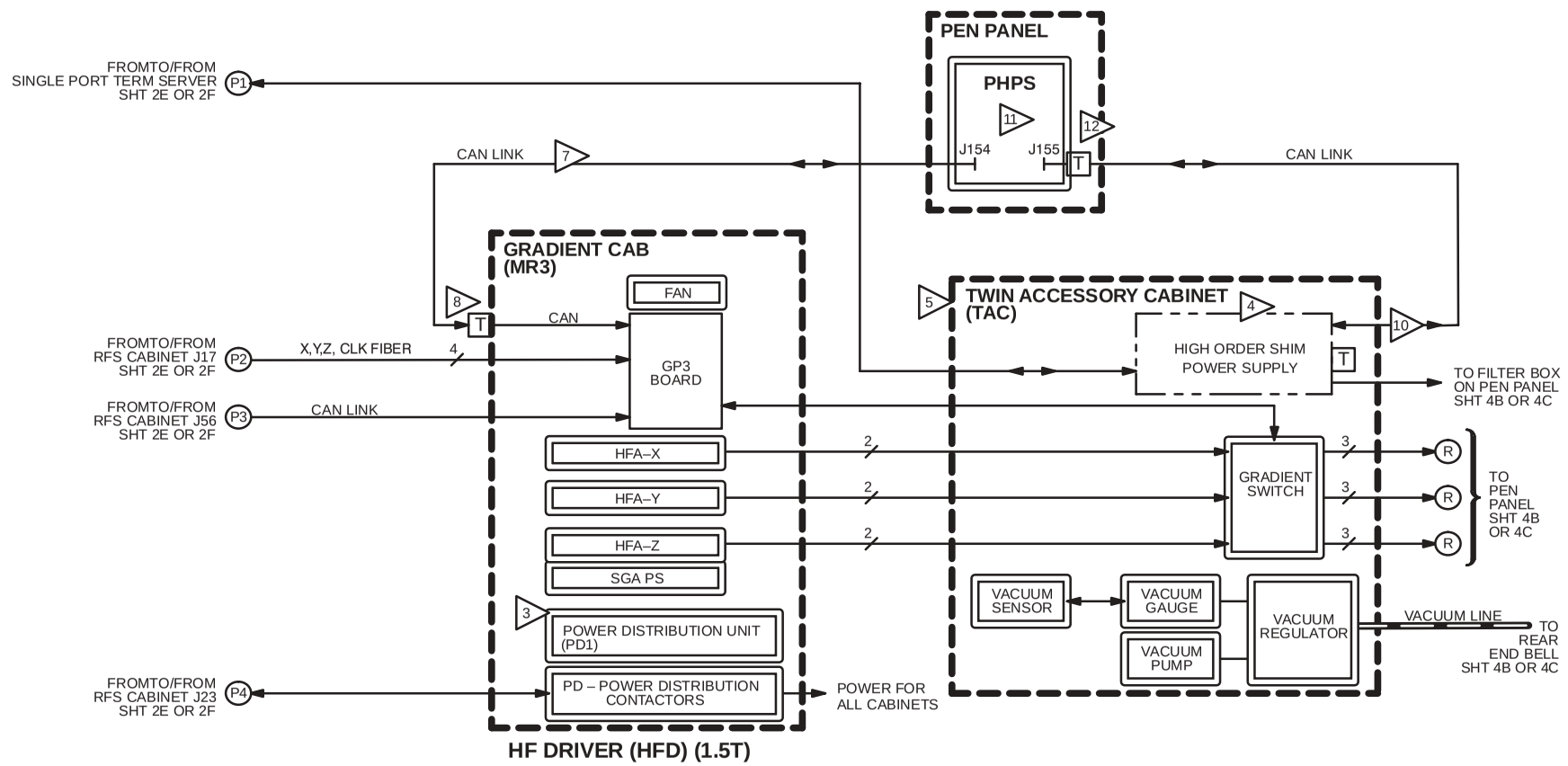

NOTES:

4 Teal PDU. See vendor manual.

5 Optional Resistive Shim Supply (HOS).

10 Can Link cable and terminator not present if a cable is already connected to the serial port.

11 PHPS present if system has RFS cabinet.

12 Terminator not installed if CAN–compatible HOS present.

HDx (14.x) & HDxt (15.x) OVERALL SYSTEM – 32 Channel
(ONLY MAIN COMMUNICATION LINES SHOWN)
SHEET 2G 0F 5

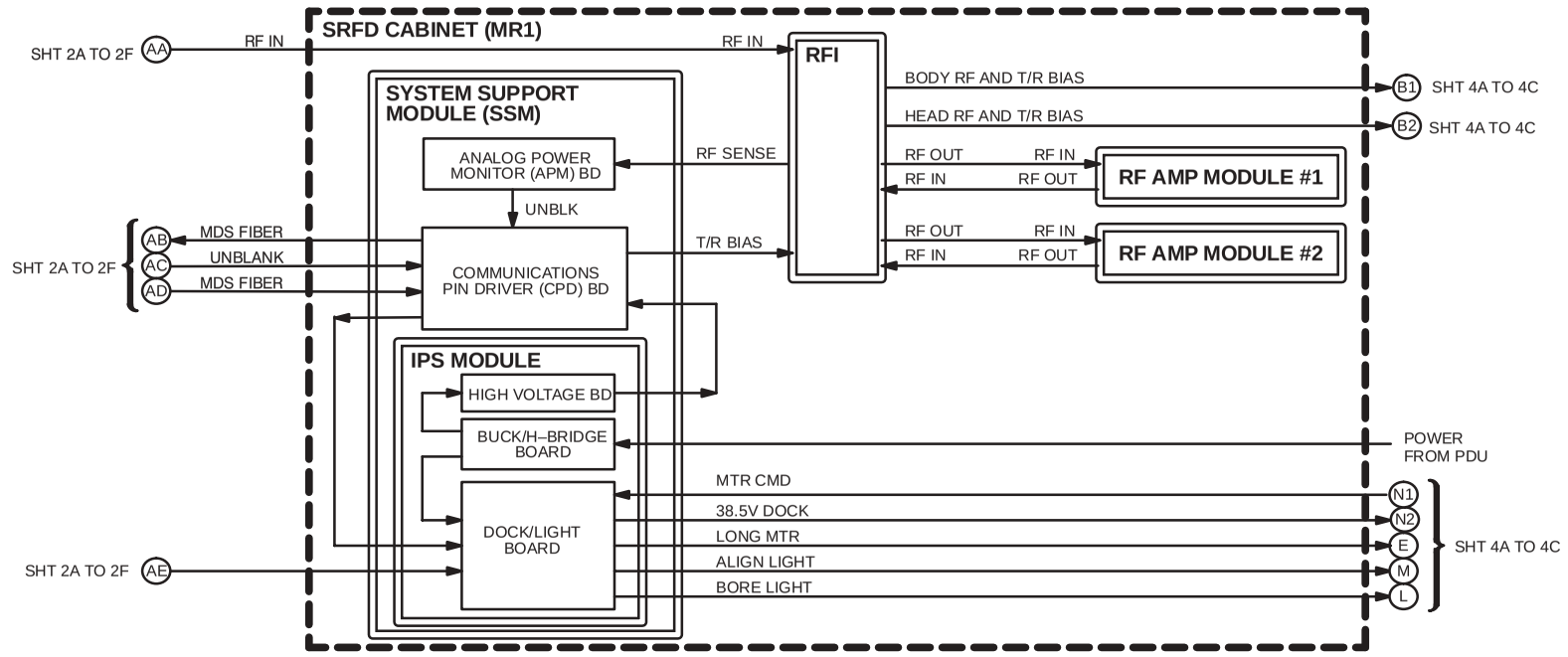

SCALEABLE RF DRIVER (SRFD) (1.5T)
EXCITE 12.x UPGRADE

OR

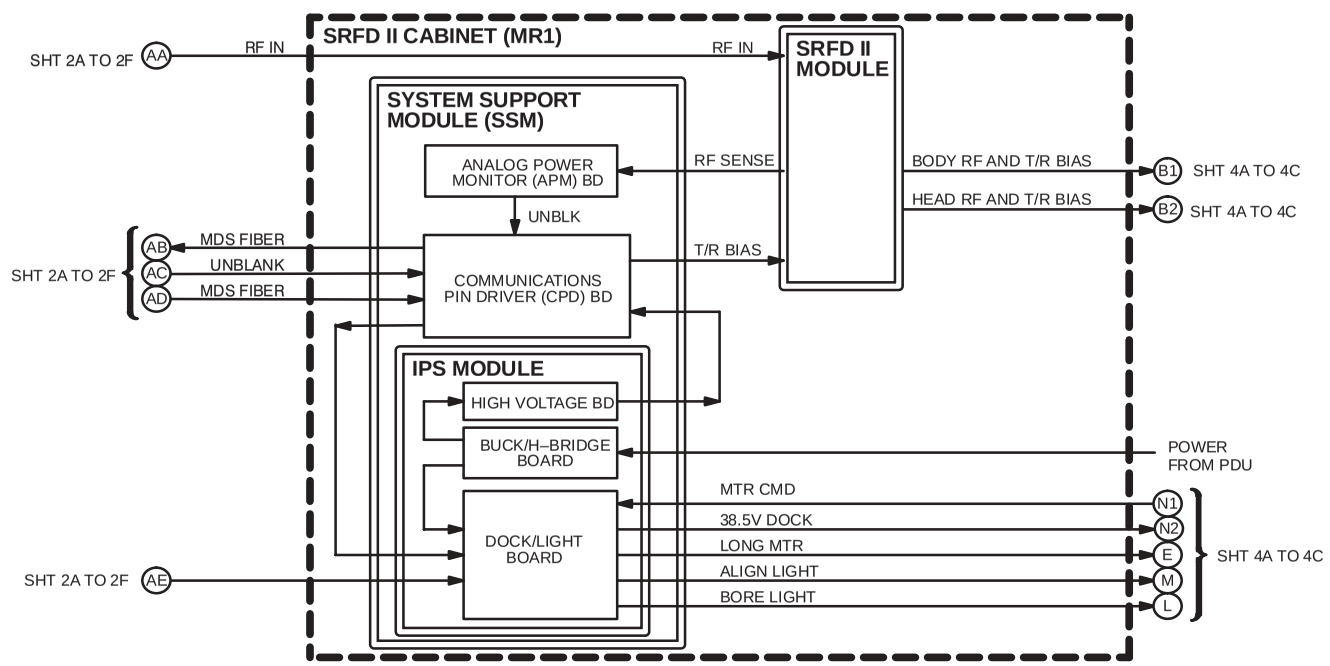

SCALEABLE RF DRIVER II (SRFD II) (1.5T)
EXCITE 12.x UPGRADE

OR

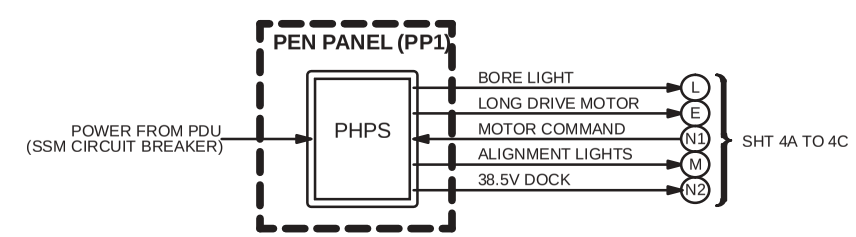

PATIENT HANDLING POWER SUPPLY (1.5T)
EXCITE HD (12.x) & HDx (14.x)

EXCITE HD (12.x), HDx (14.x) & HDxt (15.x) OVERALL SYSTEM – New Installation & Upgrade
(ONLY MAIN COMMUNICATION LINES SHOWN)
SHEET 3A 0F 5

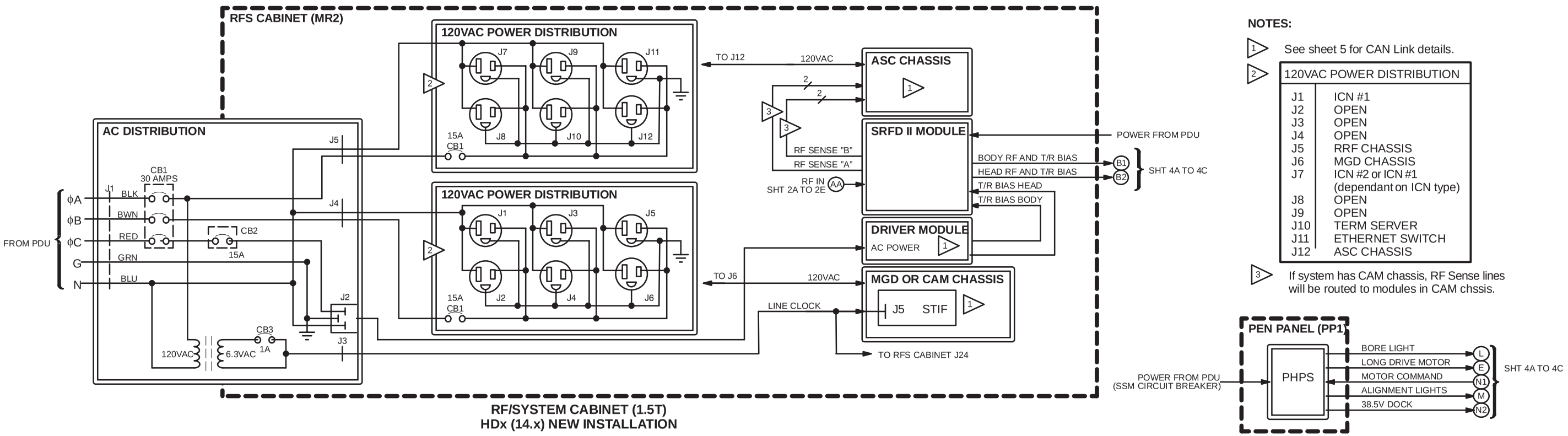

RF/SYSTEM CABINET (1.5T)
HDx (14.x) NEW INSTALLATION

NOTES:

1. See sheet 5 for CAN Link details.
2. 120VAC POWER DISTRIBUTION

J1	ICN #1
J2	OPEN
J3	OPEN
J4	OPEN
J5	RRF CHASSIS
J6	MGD CHASSIS
J7	ICN #2 or ICN #1 (dependant on ICN type)
J8	OPEN
J9	OPEN
J10	TERM SERVER
J11	ETHERNET SWITCH
J12	ASC CHASSIS

3. If system has CAM chassis, RF Sense lines will be routed to modules in CAM chssis.

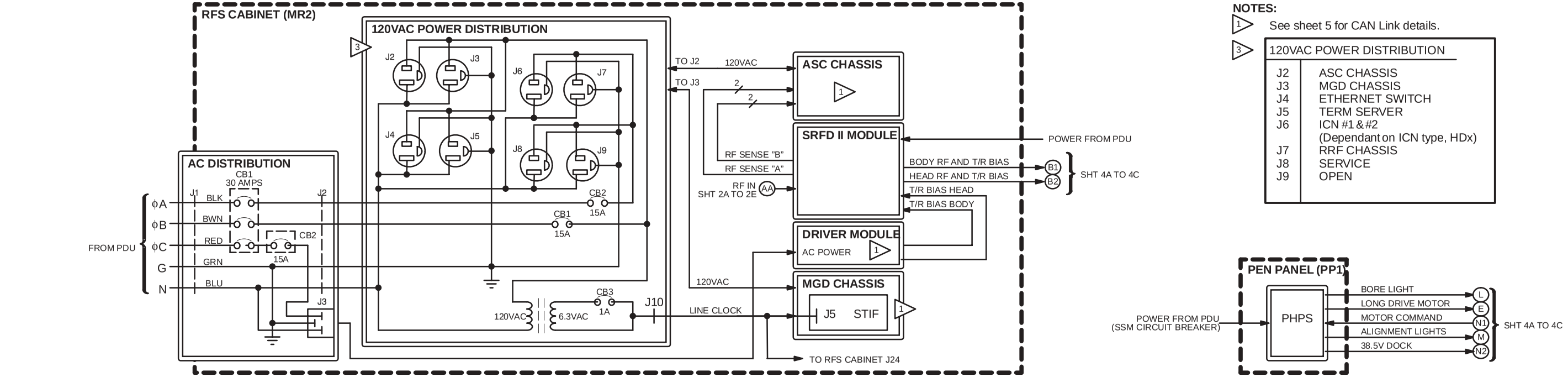

RF/SYSTEM CABINET (1.5T)
EXCITE HD (12.x) NEW INSTALLATION

NOTES:

1. See sheet 5 for CAN Link details.
3. 120VAC POWER DISTRIBUTION

J2	ASC CHASSIS
J3	MGD CHASSIS
J4	ETHERNET SWITCH
J5	TERM SERVER
J6	ICN #1 & #2 (Dependant on ICN type, HDx)
J7	RRF CHASSIS
J8	SERVICE
J9	OPEN

EXCITE HD (12.x) and HDx (14.x) & HDxt (15.x) OVERALL SYSTEM – New Installation & Upgrade
(ONLY MAIN COMMUNICATION LINES SHOWN)
SHEET 3B 0F 5

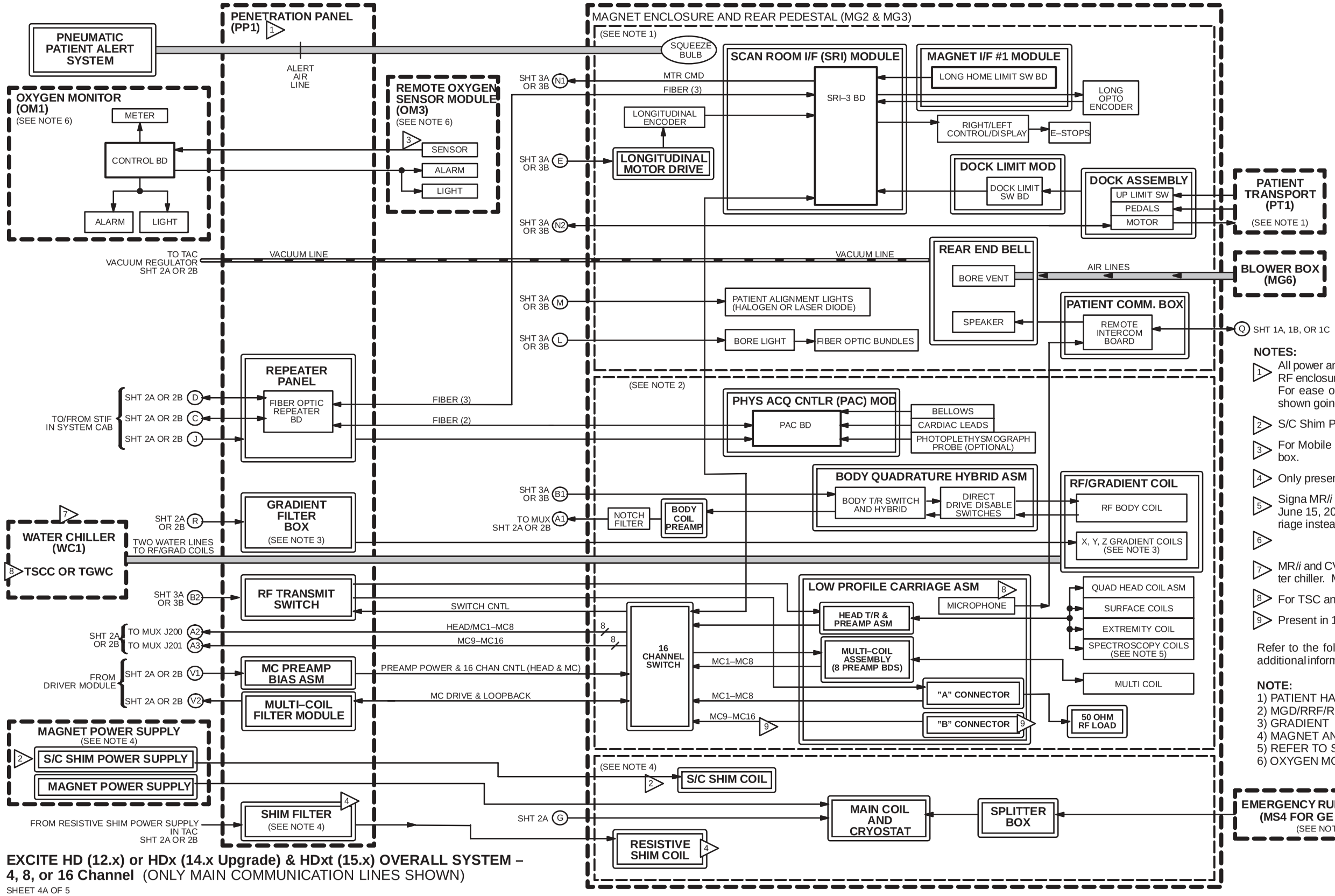

EXCITE HD (12.x) or HDx (14.x Upgrade) & HDxt (15.x) OVERALL SYSTEM – 4, 8, or 16 Channel (ONLY MAIN COMMUNICATION LINES SHOWN)

SHEET 4A OF 5

NOTES:

1. All power and signal lines entering and leaving the RF enclosure pass through the penetration panel. For ease of use, on this diagram, they are not shown going to the penetration panel.
2. S/C Shim Power Supply and S/C Shim Coils.
3. For Mobile systems, sensor is located in ceiling box.
4. Only present with TRM coils.
5. Signa MR/*i* and CV/*i* systems manufactured after June 15, 2000 have microphone in the head carriage instead of the rear end bell.
6.
7. MR/*i* and CV/*i* fixed site systems have Neslab water chiller. Mobiles have E & W heat exchangers.
8. For TSC and TGWC, see water chiller.
9. Present in 16 Channel systems only.

Refer to the following functional block diagram for additional information:

NOTE:
1) PATIENT HANDLING
2) MGD/RRF/RF
3) GRADIENT
4) MAGNET AND CRYOGENS
5) REFER TO SPECTROSCOPY MANUALS
6) OXYGEN MONITOR SUBSYSTEM (DIR. 15336).

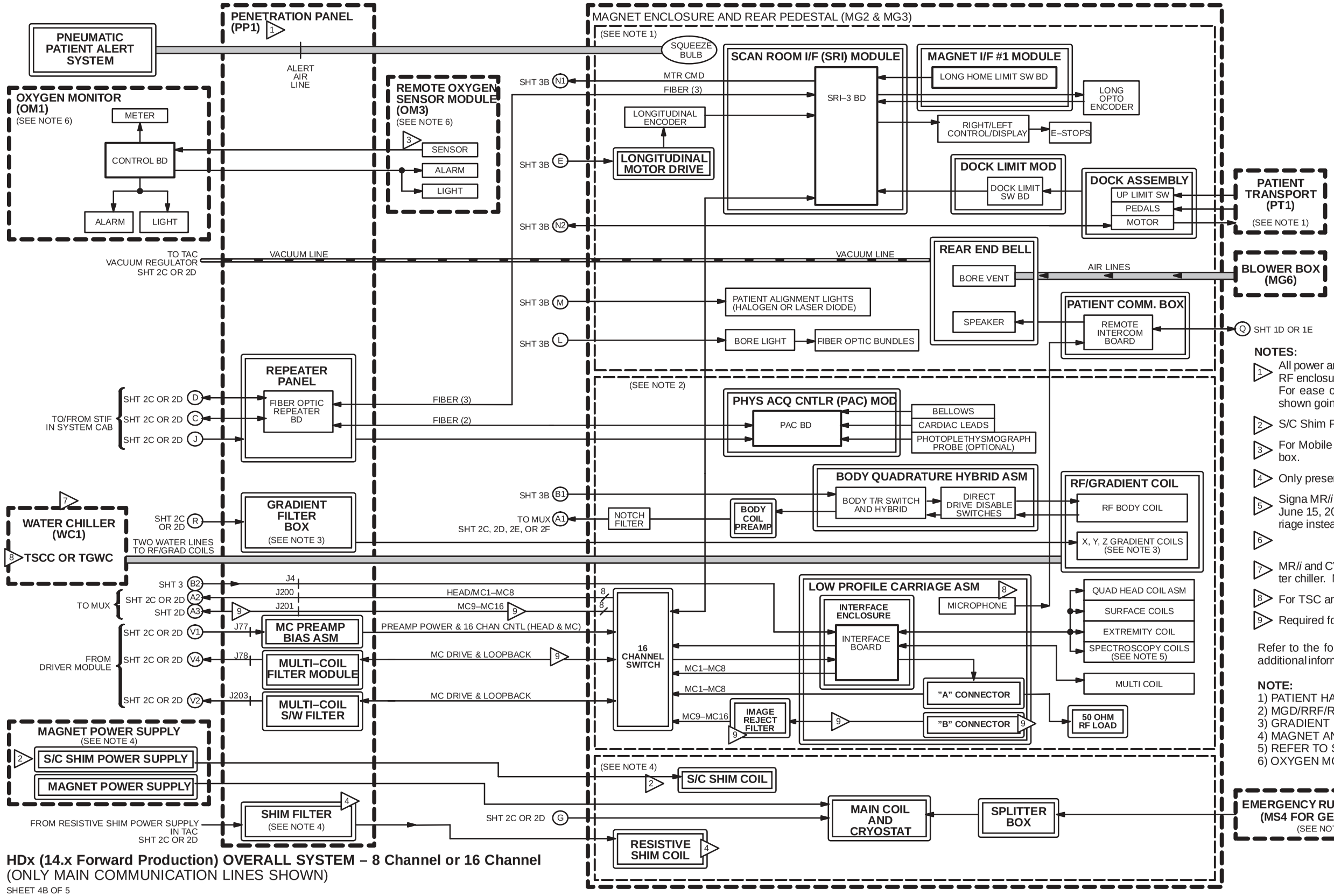

HDx (14.x Forward Production) OVERALL SYSTEM – 8 Channel or 16 Channel
(ONLY MAIN COMMUNICATION LINES SHOWN)
SHEET 4B OF 5

NOTES:

1. All power and signal lines entering and leaving the RF enclosure pass through the penetration panel. For ease of use, on this diagram, they are not shown going to the penetration panel.
2. S/C Shim Power Supply and S/C Shim Coils.
3. For Mobile systems, sensor is located in ceiling box.
4. Only present with TRM coils.
5. Signa MR/*i* and CV/*i* systems manufactured after June 15, 2000 have microphone in the head carriage instead of the rear end bell.
6.
7. MR/*i* and CV/*i* fixed site systems have Neslab water chiller. Mobiles have E & W heat exchangers.
8. For TSC and TGWC, see water chiller.
9. Required for 16 Channel systems only.

Refer to the following functional block diagram for additional information:

NOTE:
1) PATIENT HANDLING
2) MGD/RRF/RF
3) GRADIENT
4) MAGNET AND CRYOGENS
5) REFER TO SPECTROSCOPY MANUALS
6) OXYGEN MONITOR SUBSYSTEM (DIR. 15336).

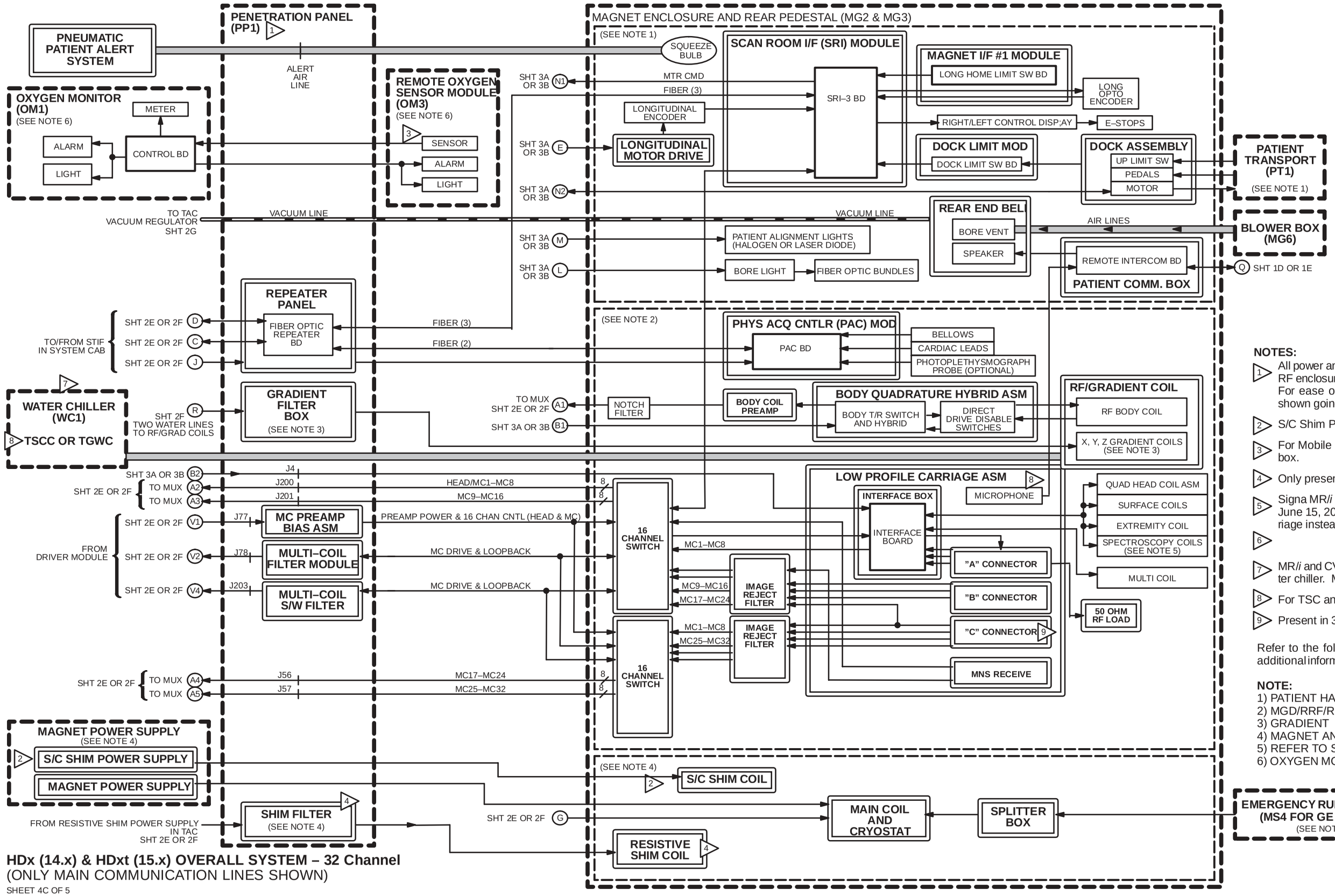

HDx (14.x) & HDxt (15.x) OVERALL SYSTEM – 32 Channel
(ONLY MAIN COMMUNICATION LINES SHOWN)
SHEET 4C OF 5

NOTES:

1. All power and signal lines entering and leaving the RF enclosure pass through the penetration panel. For ease of use, on this diagram, they are not shown going to the penetration panel.
2. S/C Shim Power Supply and S/C Shim Coils.
3. For Mobile systems, sensor is located in ceiling box.
4. Only present with TRM coils.
5. Signa MR/*i* and CV/*i* systems manufactured after June 15, 2000 have microphone in the head carriage instead of the rear end bell.
6.
7. MR/*i* and CV/*i* fixed site systems have Neslab water chiller. Mobiles have E & W heat exchangers.
8. For TSC and TGWC, see water chiller.
9. Present in 32 Channel systems only.

Refer to the following functional block diagram for additional information:

NOTE:
1) PATIENT HANDLING
2) MGD/RRF/RF
3) GRADIENT
4) MAGNET AND CRYOGENS
5) REFER TO SPECTROSCOPY MANUALS
6) OXYGEN MONITOR SUBSYSTEM (DIR. 15336).

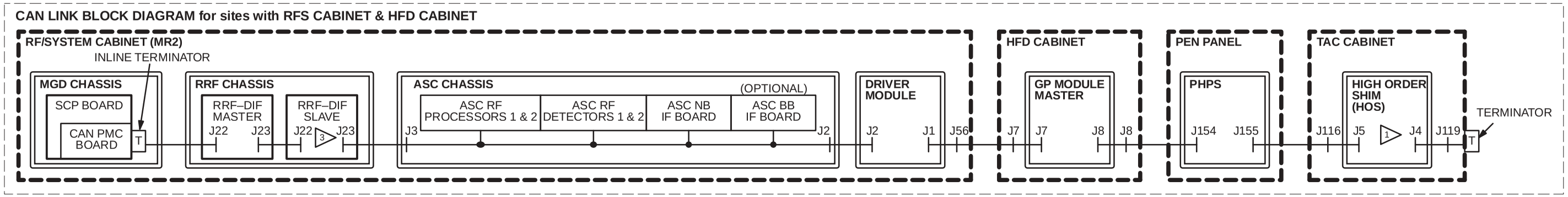

OR

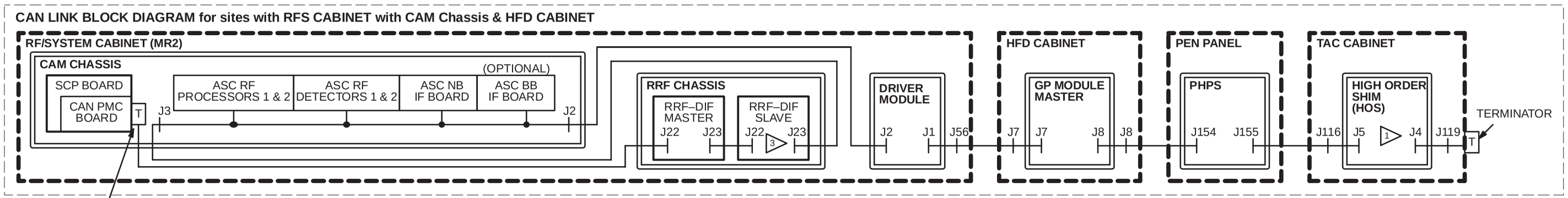

OR

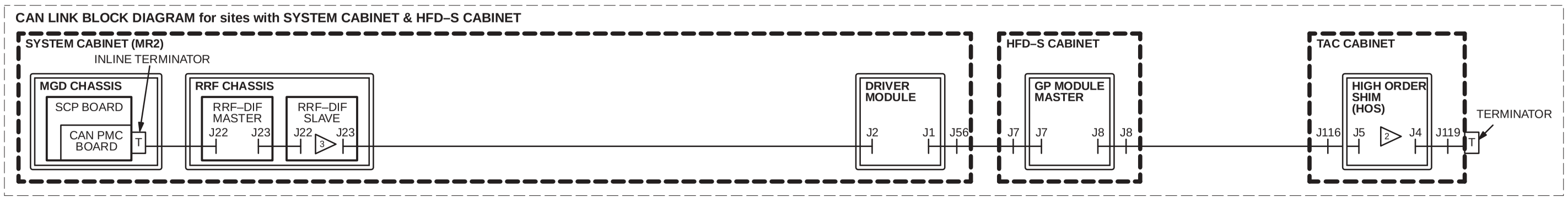

NOTES:

1. HOS is optional. Terminator must be connected to J155 on PHPS if HOS not present.
2. HOS is optional. Terminator must be connected to J8 on HFD Cabinet I/F if HOS not present.
3. Only present in systems equipped with 16 Channels. If system is 8 Channels or less, then RF–DIF Master J23 connects to next unit in link as shown.

EXCITE HD (12.x) and HDx (14.x) & HDxt (15.x) OVERALL SYSTEM
CAN Link Block Diagrams
(ONLY MAIN COMMUNICATION LINES SHOWN)
SHEET 5 0F 5

OPERATOR WORKSPACE

TABLE OF CONTENTS

SECTION **PAGE**

1 – OPERATOR WORKSPACE

HD OVERALL SYSTEM – OPERATOR WORKSPACE CABINET w/8000 & GOC AA (Forward Production or Pre–EXCITE to HD Upgrades) 1–1

HD OVERALL SYSTEM – OPERATOR WORKSPACE CABINET w/8000 & WIM (EXCITE to HD Upgrades) 1–2

HD OVERALL SYSTEM – OPERATOR WORKSPACE CABINET w/8200 & GOC AA (Forward Production or Pre–EXCITE to HD Upgrades) 1–3

HDx & HDxt OVERALL SYSTEM – OPERATOR WORKSPACE CABINETw/9300 & GOC AA (Forward Production, EXCITE, or Pre–EXCITE to HDx Upgrades) 1–4

HDx & HDxt OVERALL SYSTEM – OPERATOR WORKSPACE CABINETw/9300 & GOC AA (EXCITE HD to HDx Upgrades) 1–5

HD OVERALL SYSTEM – OPERATOR WORKSPACE CABINET/TABLE w/WIM (Forward Production & Upgrades) 1–6

HD OVERALL SYSTEM – OPERATOR WORKSPACE CABINET/TABLE w/GOC AA (Forward Production & Upgrades) 1–7

HDx & HDxt OVERALL SYSTEM – OPERATOR WORKSPACE CABINET/TABLE w/GOC AA (Forward Production & Upgrades) 1–8

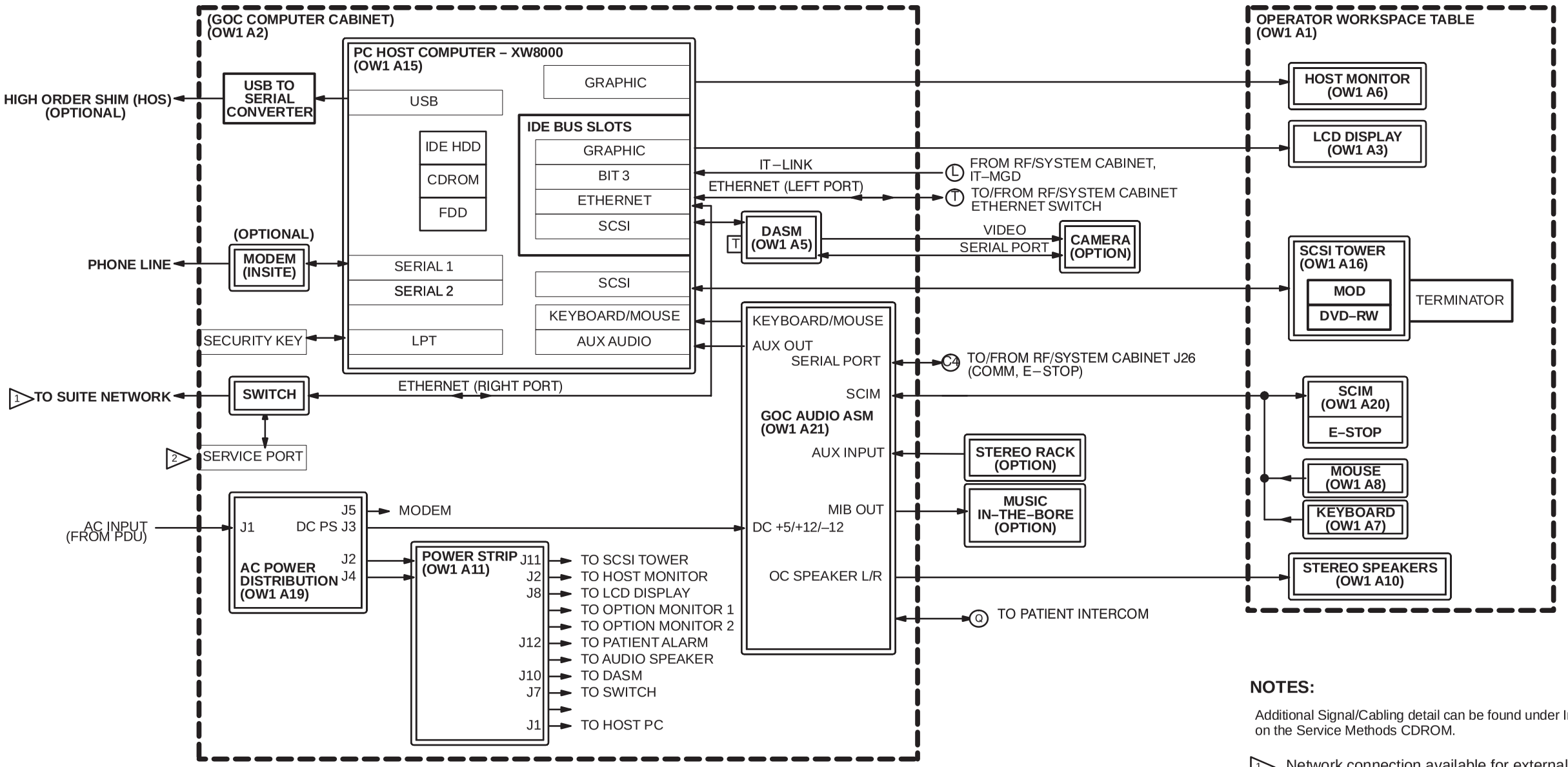

NOTES:

Additional Signal/Cabling detail can be found under Interconnects on the Service Methods CDROM.

1 Network connection available for external suite connection

2 Network connection available at front of goc assembly for the service laptop

Refer to the following functional block diagram for additional information:

NOTE:
1) PATIENT HANDLING
2) MGD/RRF/RF

EXCITE HD (12.x) OVERALL SYSTEM
Forward Production or Pre–EXCITE to HD Upgrades
(OPERATOR WORKSPACE CABINET w/8000 & TABLE)
SHEET 1A OF 5

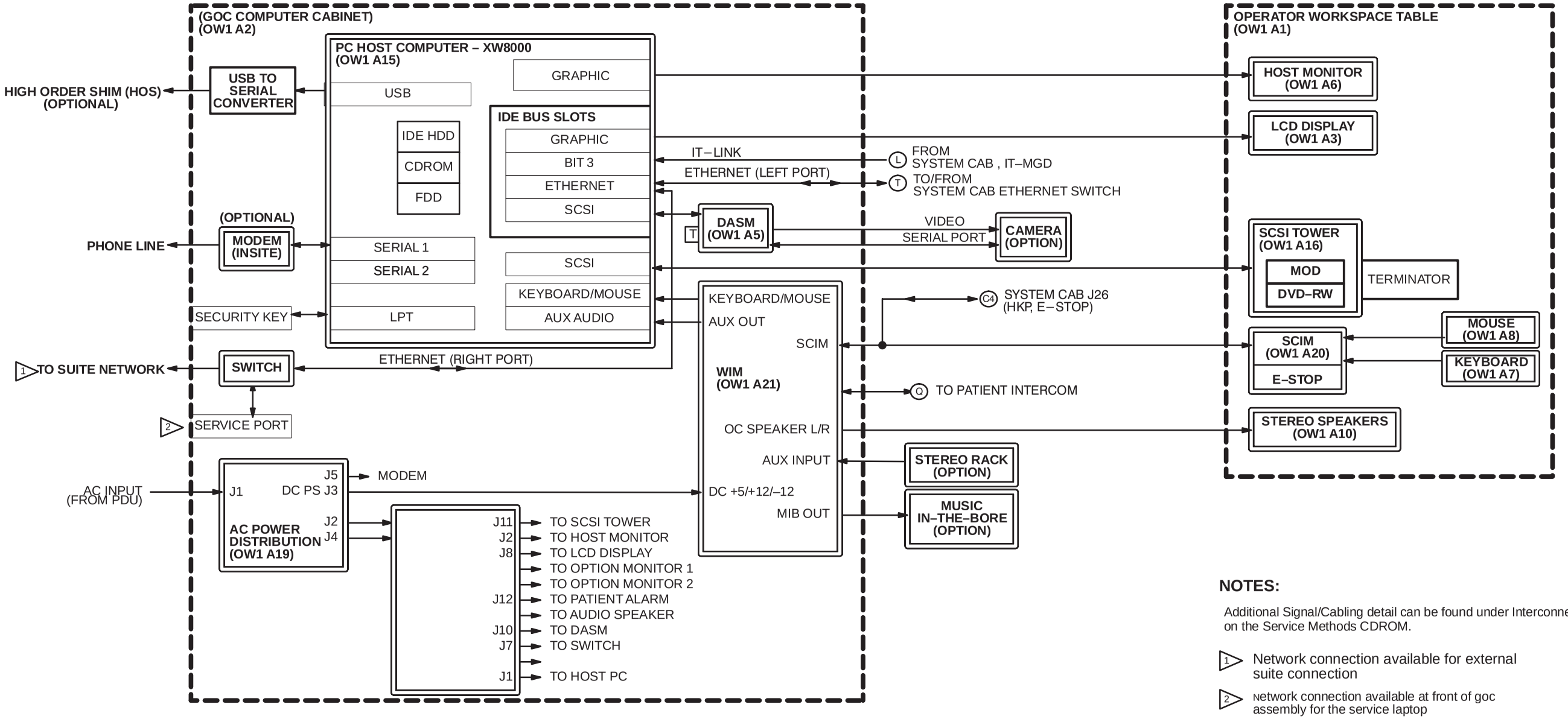

NOTES:

Additional Signal/Cabling detail can be found under Interconnects on the Service Methods CDROM.

1 Network connection available for external suite connection

2 Network connection available at front of goc assembly for the service laptop

Refer to the following functional block diagram for additional information:

NOTE:
1) PATIENT HANDLING
2) MGD/RRF/RF

EXCITE HD (12.x) OVERALL SYSTEM
EXCITE to HD Upgrades
(OPERATOR WORKSPACE CABINET w/8000 & TABLE)
SHEET 1B OF 5

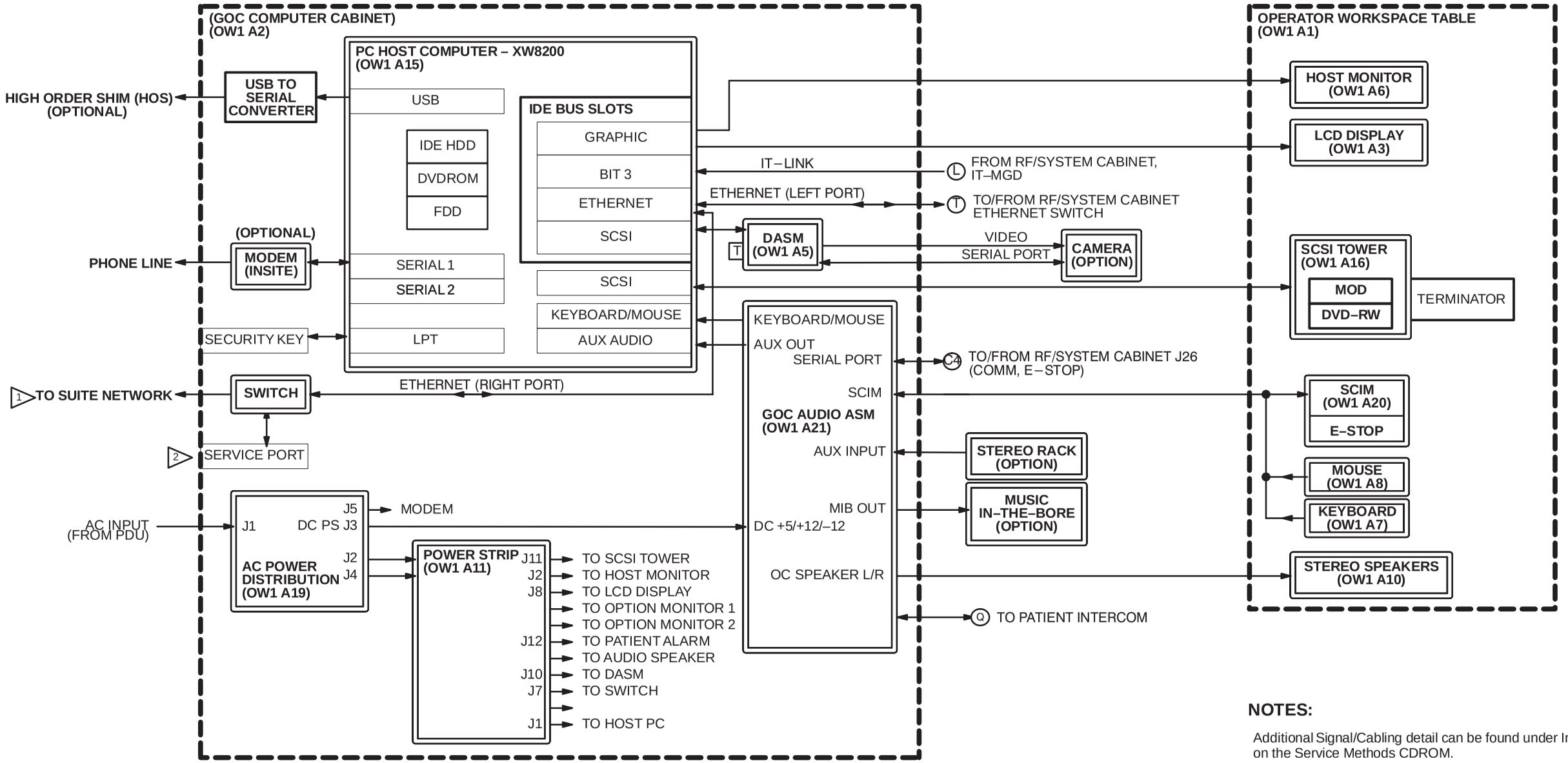

NOTES:

Additional Signal/Cabling detail can be found under Interconnects on the Service Methods CDROM.

1 Network connection available for external suite connection

2 Network connection available at front of goc assembly for the service laptop

Refer to the following functional block diagram for additional information:

NOTE:
1) PATIENT HANDLING
2) MGD/RRF/RF

EXCITE HD (12.x) OVERALL SYSTEM
Forward Production or Pre–EXCITE to HD Upgrades
(OPERATOR WORKSPACE CABINET w/8200 & TABLE)
SHEET 1C OF 5

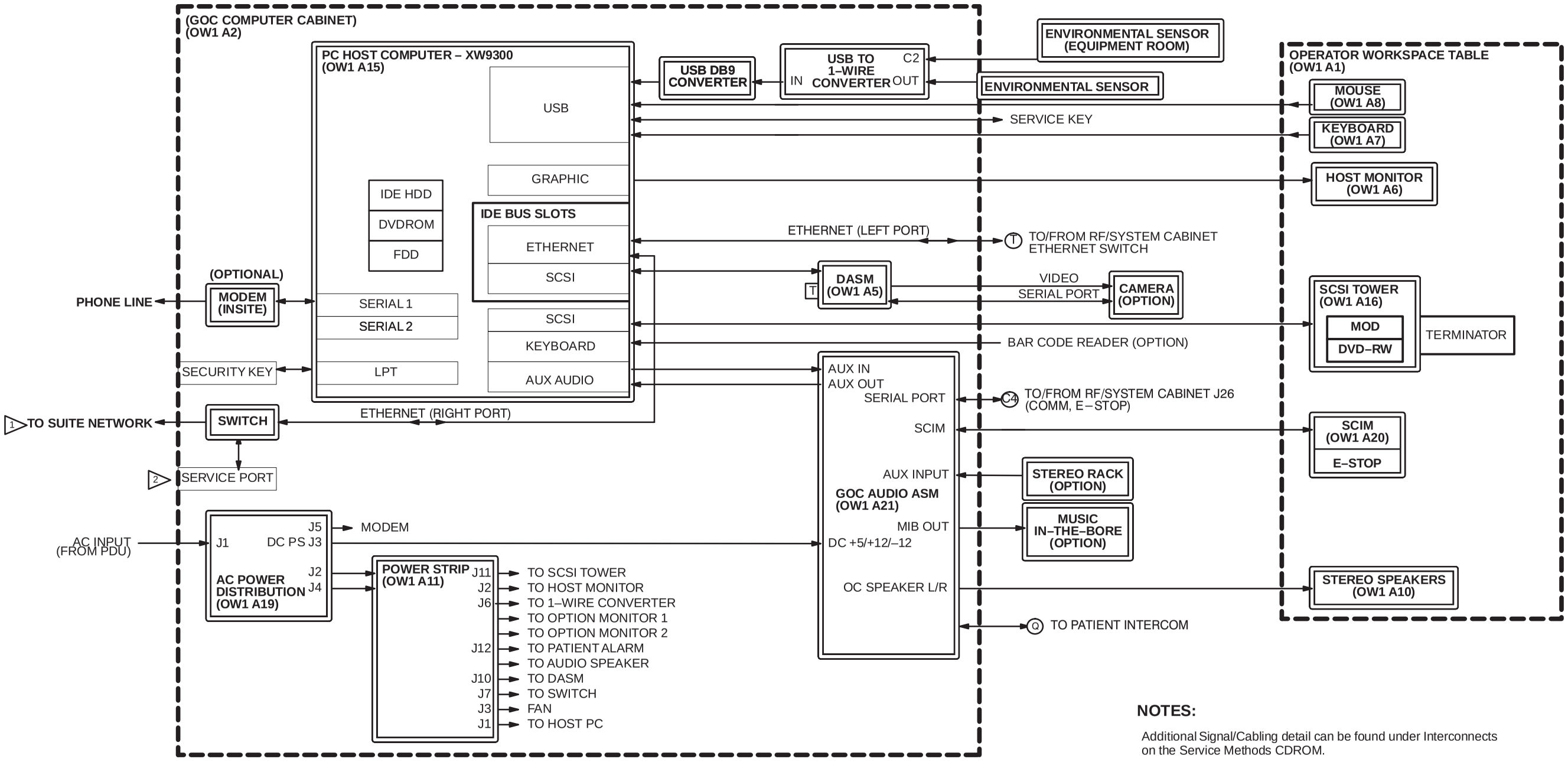

NOTES:

Additional Signal/Cabling detail can be found under Interconnects on the Service Methods CDROM.

1 Network connection available for external suite connection

2 Network connection available at front of GOC assembly for the service laptop

Refer to the following functional block diagram for additional information:

NOTE:
1) PATIENT HANDLING
2) MGD/RRF/RF

HDx (14.x) & HDxt (15.x) OVERALL SYSTEM
Forward Production, EXCITE, or Pre–EXCITE to HDx Upgrades
(OPERATOR WORKSPACE CABINET w/9300 & TABLE)
SHEET 1D OF 5

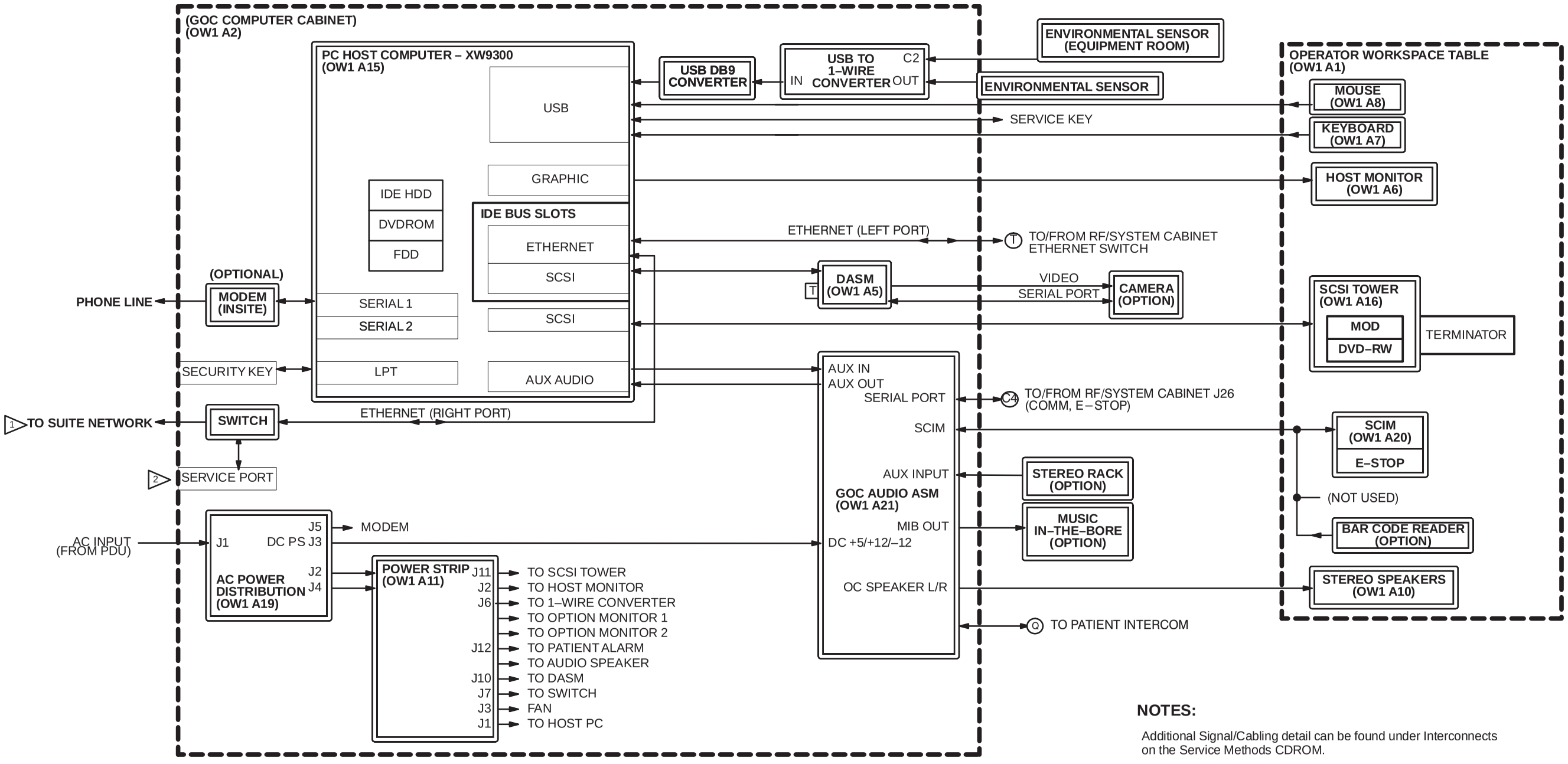

NOTES:

Additional Signal/Cabling detail can be found under Interconnects on the Service Methods CDROM.

1 Network connection available for external suite connection

2 Network connection available at front of GOC assembly for the service laptop

Refer to the following functional block diagram for additional information:

NOTE:
1) PATIENT HANDLING
2) MGD/RRF/RF

HDx (14.x) & HDxt (15.x) OVERALL SYSTEM
EXCITE HD to HDx Upgrades
(OPERATOR WORKSPACE CABINET w/9300 & TABLE)
SHEET 1E OF 5

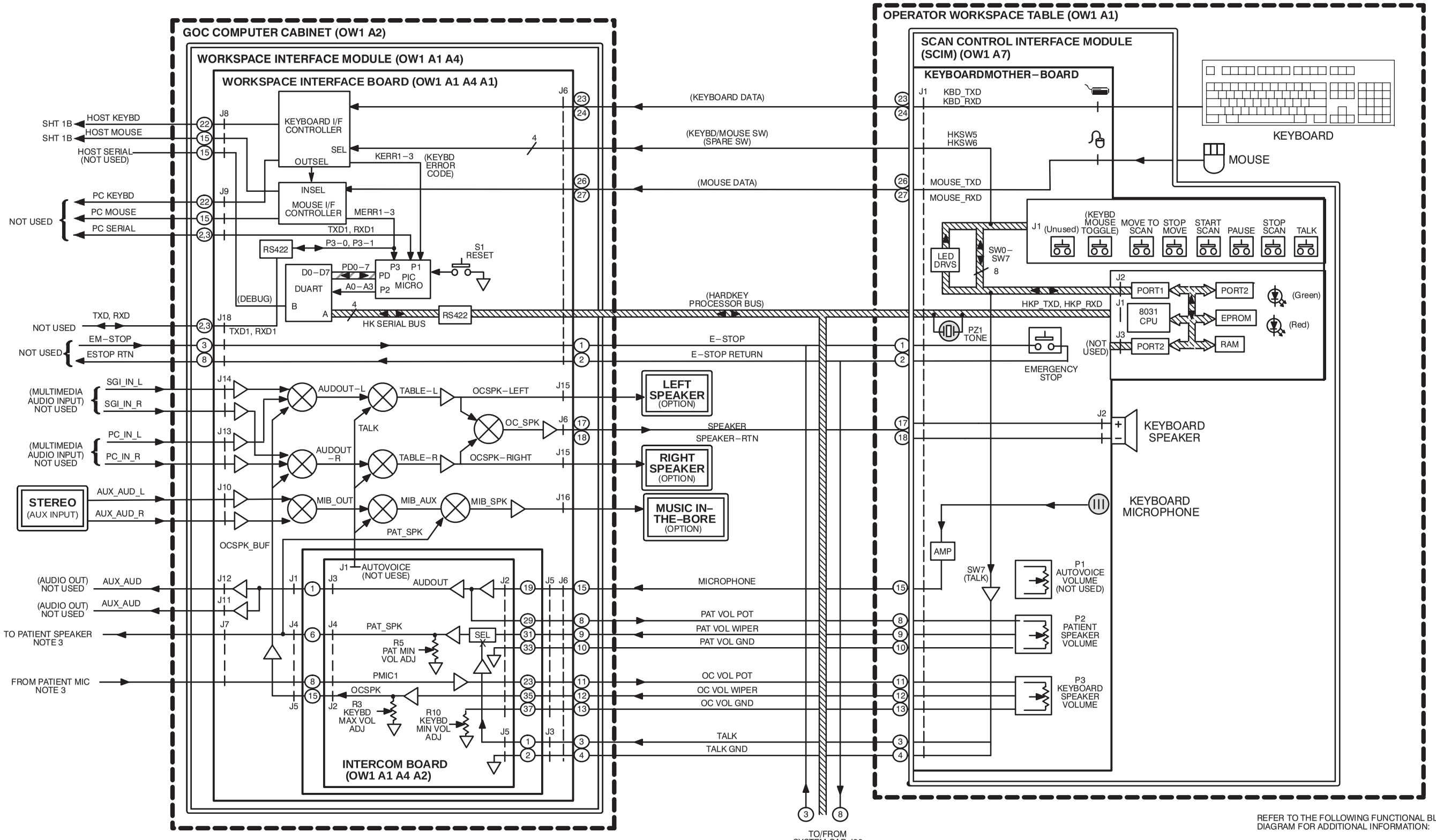

EXCITE HD (12.x) OVERALL SYSTEM
(OPERATOR WORKSPACE CABINET/TABLE with WIM)

SHEET 2A OF 2

REFER TO THE FOLLOWING FUNCTIONAL BLOCK DIAGRAM FOR ADDITIONAL INFORMATION:

NOTE:
1) PATIENT HANDLING
2) MGD/RRF/RF
3) OVERALL SYSTEM

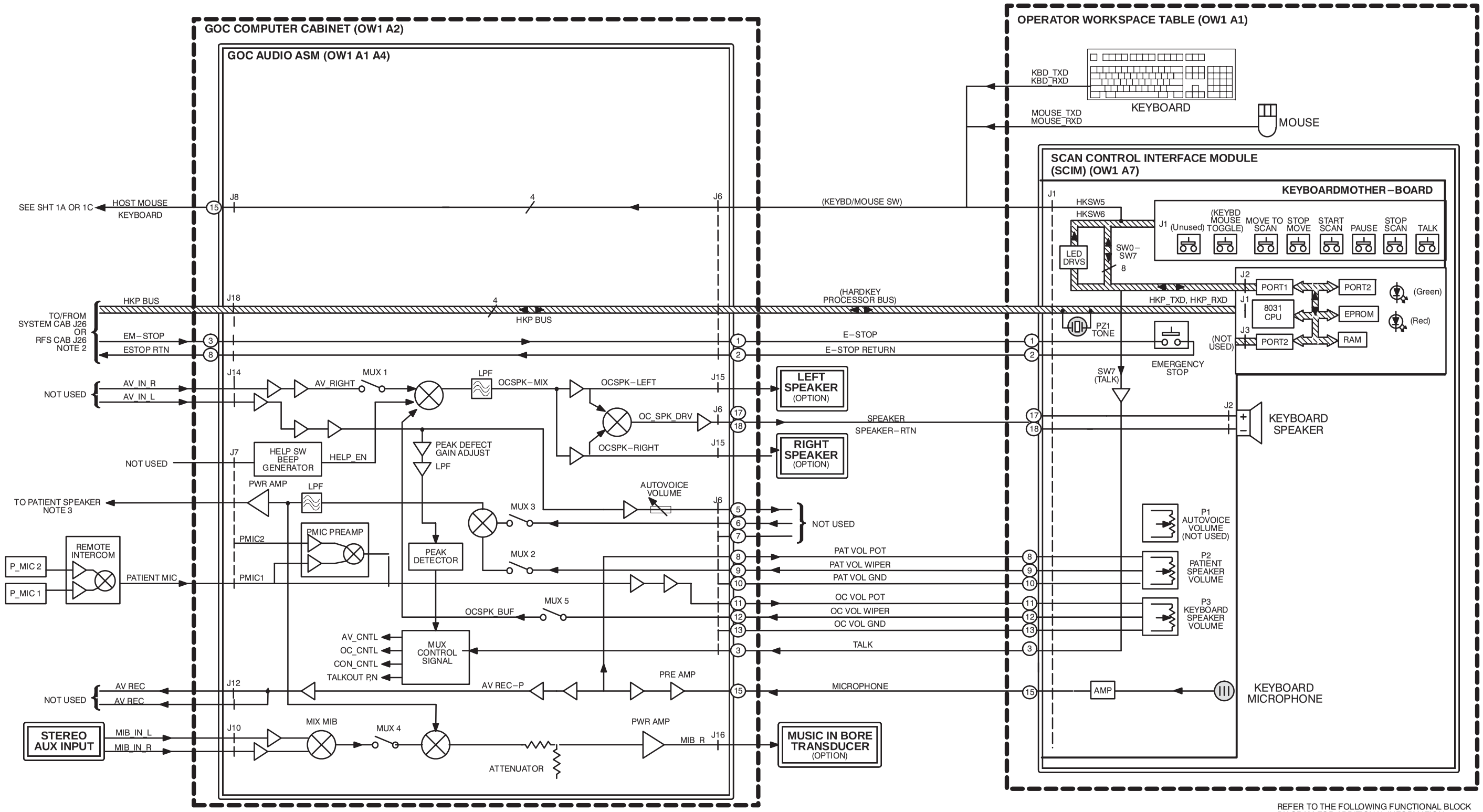

EXCITE HD (12.x) OVERALL SYSTEM
(OPERATOR WORKSPACE CABINET/TABLE with GOC AUDIO ASM

SHEET 2B OF 2

REFER TO THE FOLLOWING FUNCTIONAL BLOCK DIAGRAM FOR ADDITIONAL INFORMATION:

NOTE:
1) PATIENT HANDLING
2) MGD/RRF/RF
3) OVERALL SYSTEM

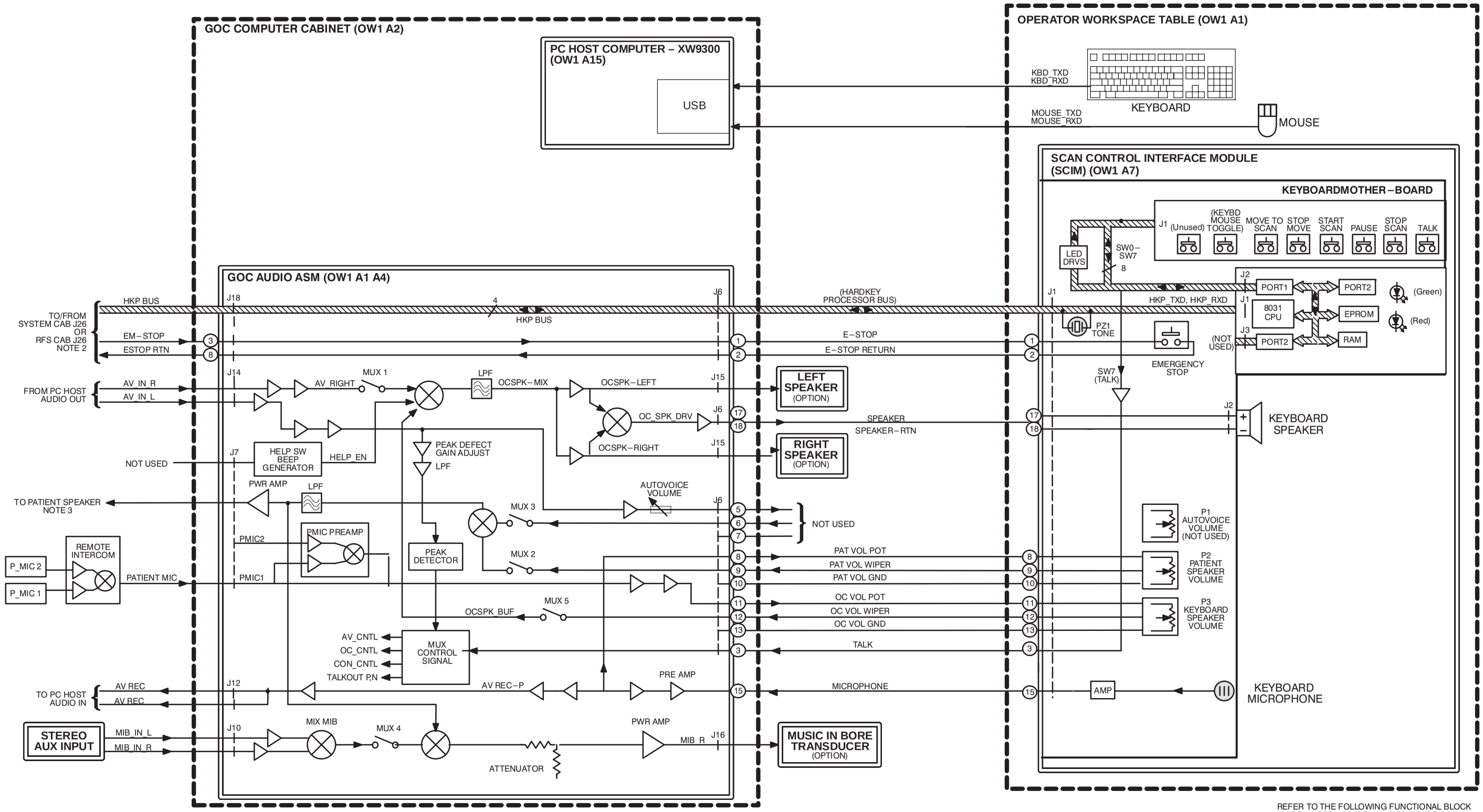

REFER TO THE FOLLOWING FUNCTIONAL BLOCK DIAGRAM FOR ADDITIONAL INFORMATION:

NOTE:
1) PATIENT HANDLING
2) MGD/RRF/RF
3) OVERALL SYSTEM

HDx (14.x) & HDxt (15.x) OVERALL SYSTEM
(OPERATOR WORKSPACE CABINET/TABLE with GOC AUDIO ASM

SHEET 2C OF 2

PATIENT HANDLING

TABLE OF CONTENTS

SECTION **PAGE**

1 – PATIENT HANDLING

HD, HDx & HDxt PATIENT HANDLING (Forward Production or Pre–EXCITE Upgrades) 1–1
HD, HDx & HDxt PATIENT HANDLING (EXCITE Upgrades) 1–2
HD, HDx & HDxt PATIENT HANDLING (Forward Production or Pre–EXCITE Upgrades) 1–3
HD, HDx & HDxt PATIENT HANDLING (EXCITE Upgrades) 1–4
HD, HDx & HDxt PATIENT HANDLING POWER SUPPLY (PHPS) 1–5
HD PATIENT HANDLING – SSM 1–6
HD, HDx & HDxt PATIENT HANDLING – SSM (EXCITE Upgrades) 1–7
HD, HDx & HDxt PATIENT HANDLING – SSM 1–8

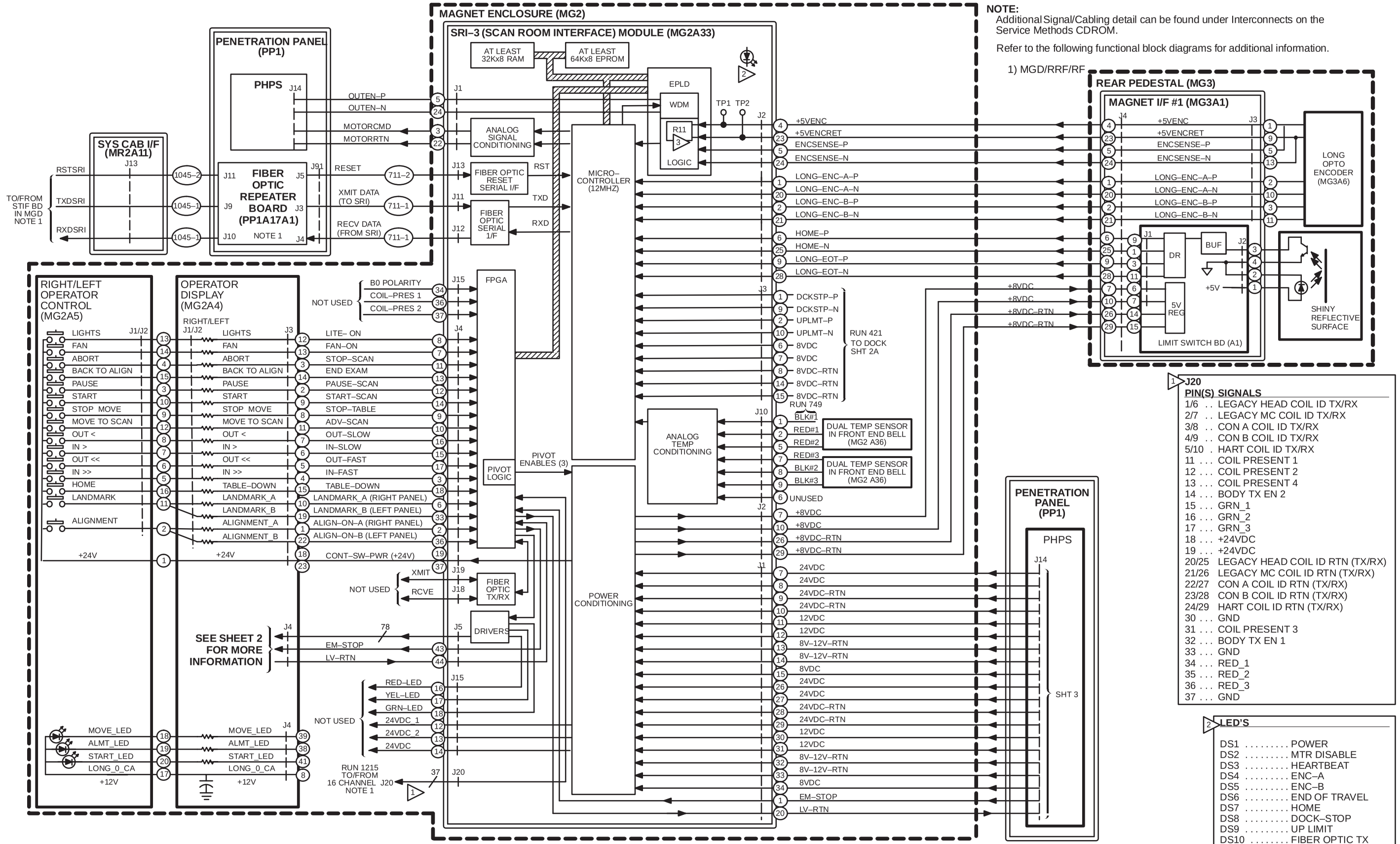

EXCITE HD (12.x), HDx (14.x) & HDxt (15x) PATIENT HANDLING
Forward Production & Pre–EXCITE Upgrade
SHEET 1A OF 5

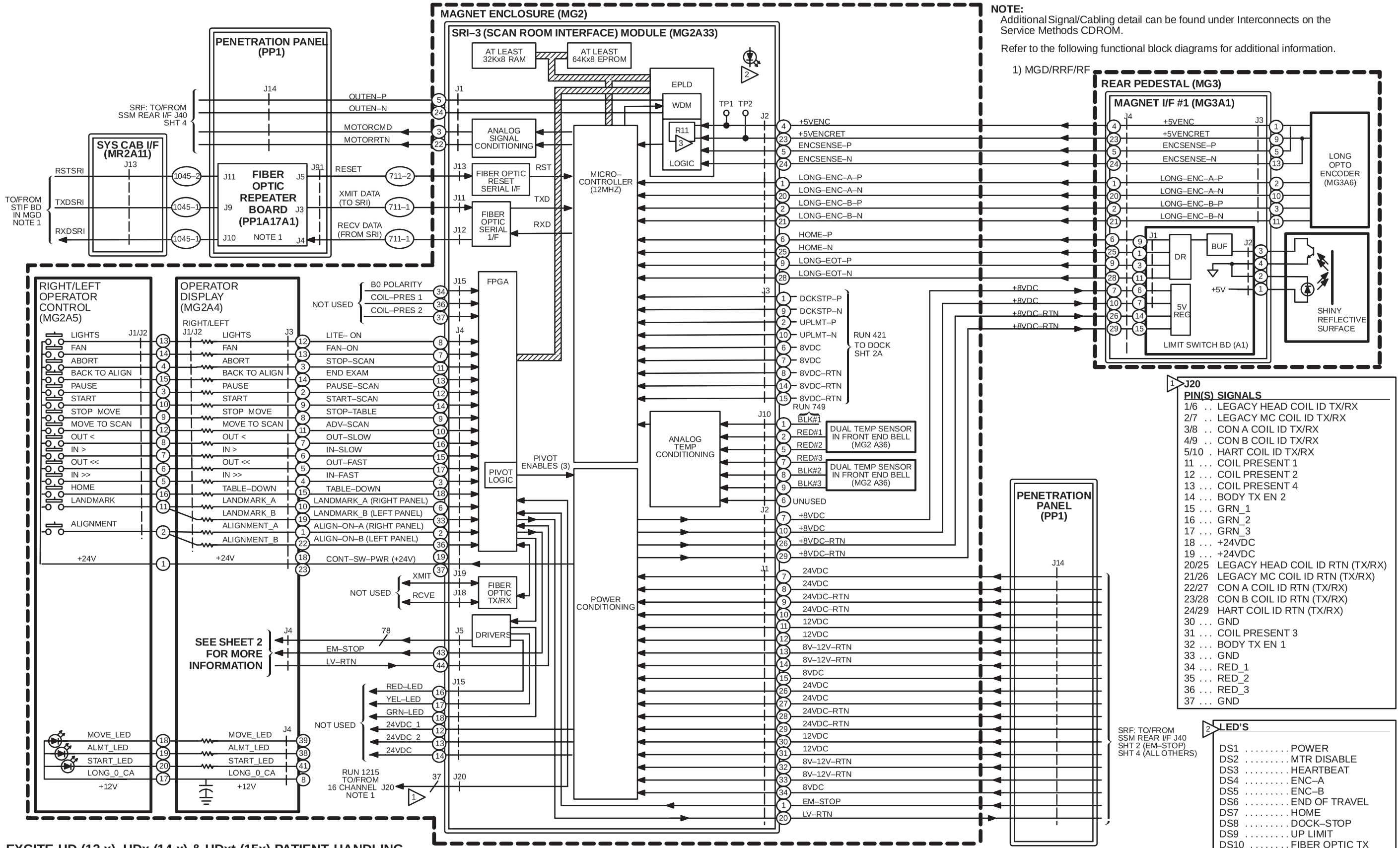

NOTE:
Additional Signal/Cabling detail can be found under Interconnects on the Service Methods CDROM.

Refer to the following functional block diagrams for additional information.

1) MGD/RRF/RF

J20

PIN(S)	SIGNALS
1/6	LEGACY HEAD COIL ID TX/RX
2/7	LEGACY MC COIL ID TX/RX
3/8	CON A COIL ID TX/RX
4/9	CON B COIL ID TX/RX
5/10	HART COIL ID TX/RX
11	COIL PRESENT 1
12	COIL PRESENT 2
13	COIL PRESENT 4
14	BODY TX EN 2
15	GRN_1
16	GRN_2
17	GRN_3
18	+24VDC
19	+24VDC
20/25	LEGACY HEAD COIL ID RTN (TX/RX)
21/26	LEGACY MC COIL ID RTN (TX/RX)
22/27	CON A COIL ID RTN (TX/RX)
23/28	CON B COIL ID RTN (TX/RX)
24/29	HART COIL ID RTN (TX/RX)
30	GND
31	COIL PRESENT 3
32	BODY TX EN 1
33	GND
34	RED_1
35	RED_2
36	RED_3
37	GND

LED'S

DS1	POWER
DS2	MTR DISABLE
DS3	HEARTBEAT
DS4	ENC–A
DS5	ENC–B
DS6	END OF TRAVEL
DS7	HOME
DS8	DOCK–STOP
DS9	UP LIMIT
DS10	FIBER OPTIC TX
DS11	FIBER OTIC RX
DS12	FIBER OPTIC RESET
DS13 TO DS24	NOT USED

3 DO NOT ADJUST R11

EXCITE HD (12.x), HDx (14.x) & HDxt (15x) PATIENT HANDLING
EXCITE Upgrade
SHEET 1B OF 5

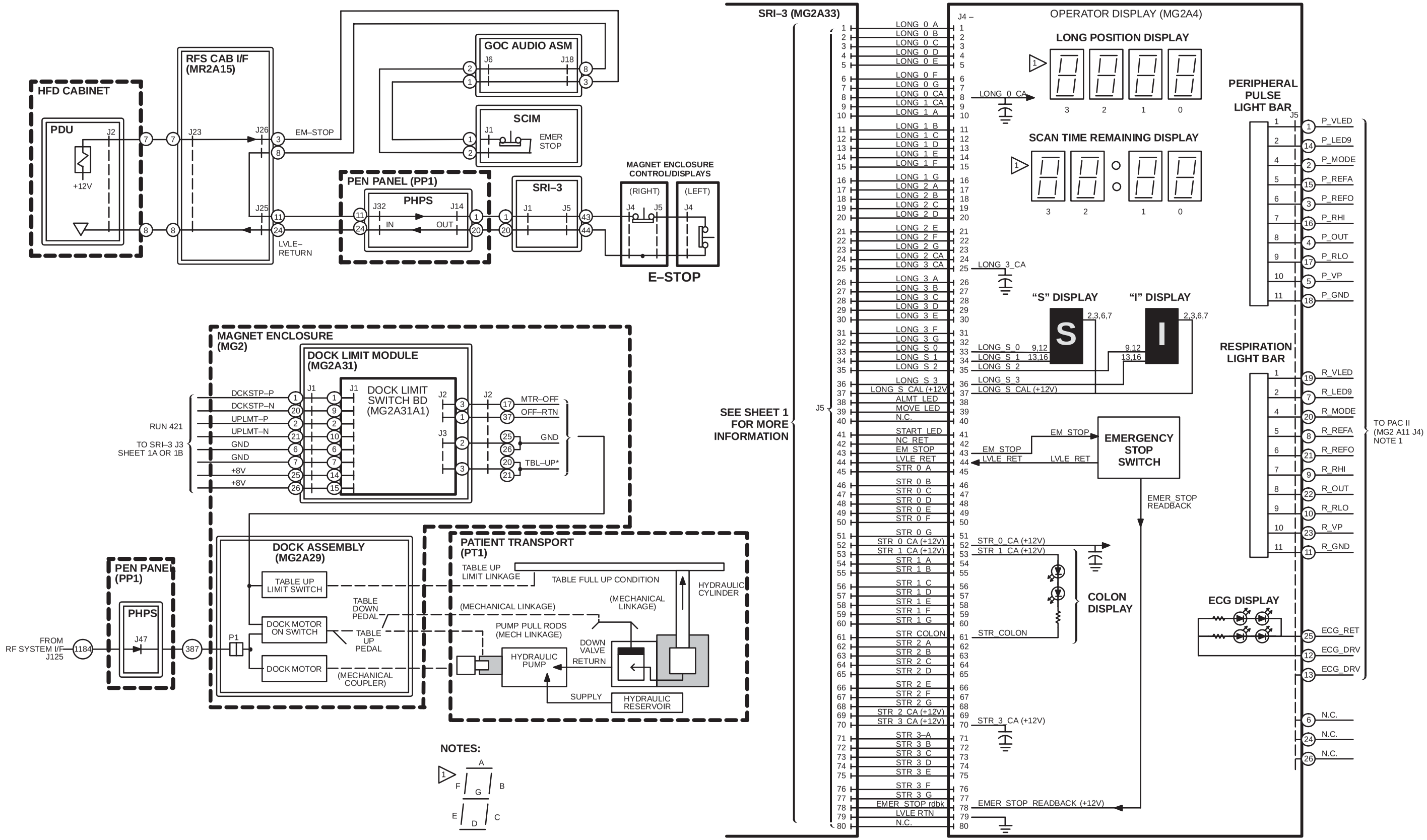

EXCITE HD (12.x), HDx (14.x) & HDxt (15x) PATIENT HANDLING
Forward Production & Pre–EXCITE Upgrade
SHEET 2A OF 5

Refer to the following functional block diagrams for additional information. :

1) MGD/RRF/RF

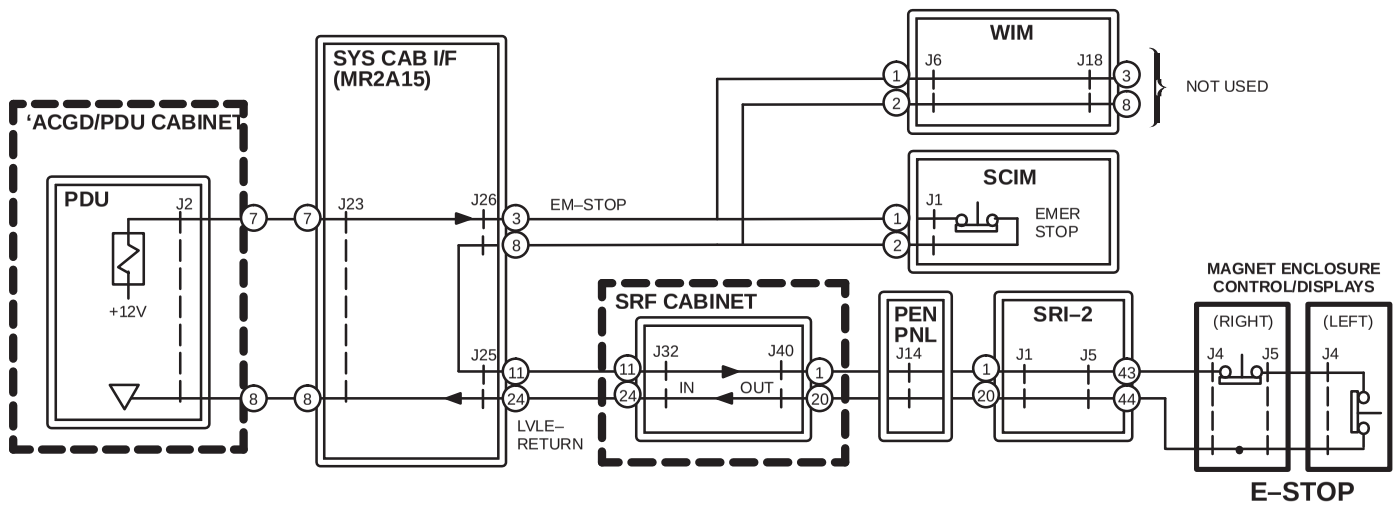

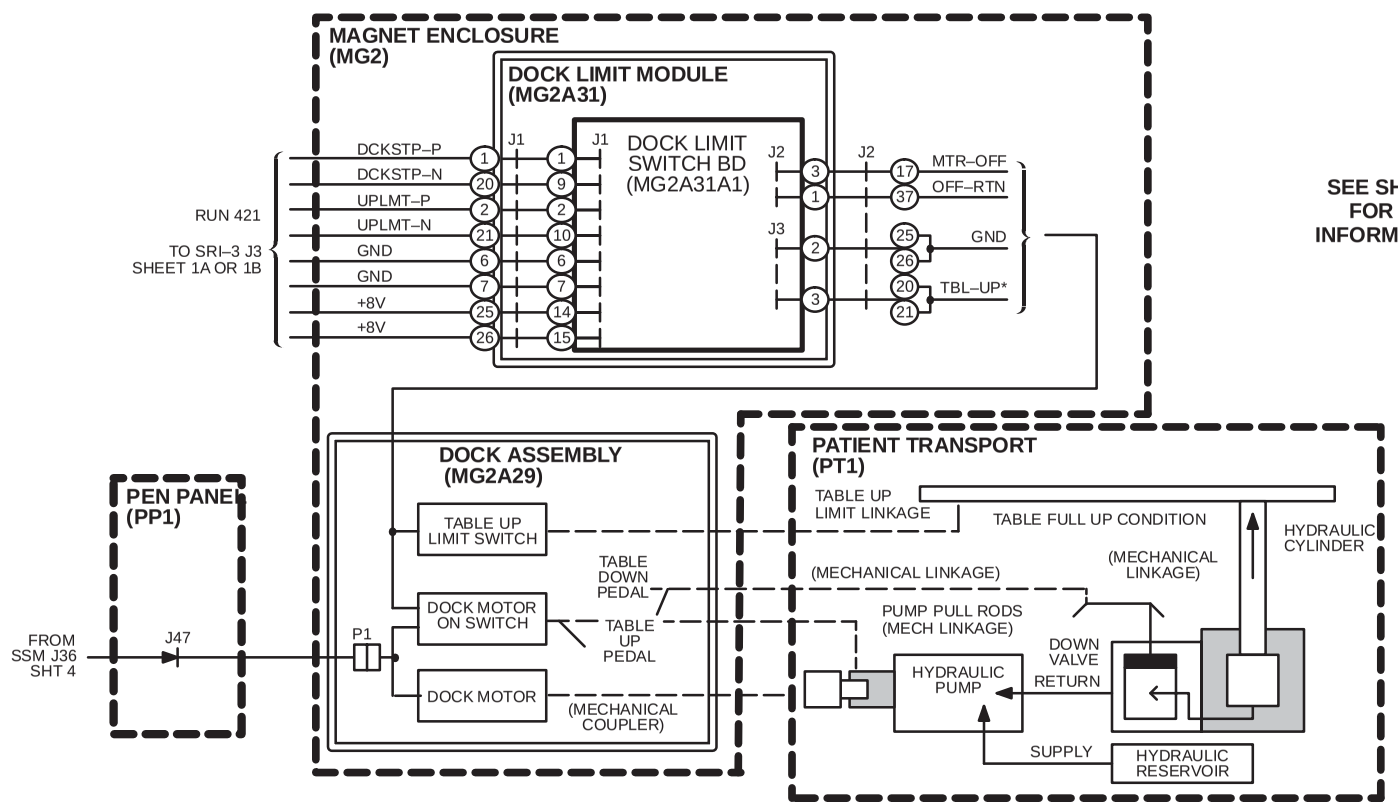

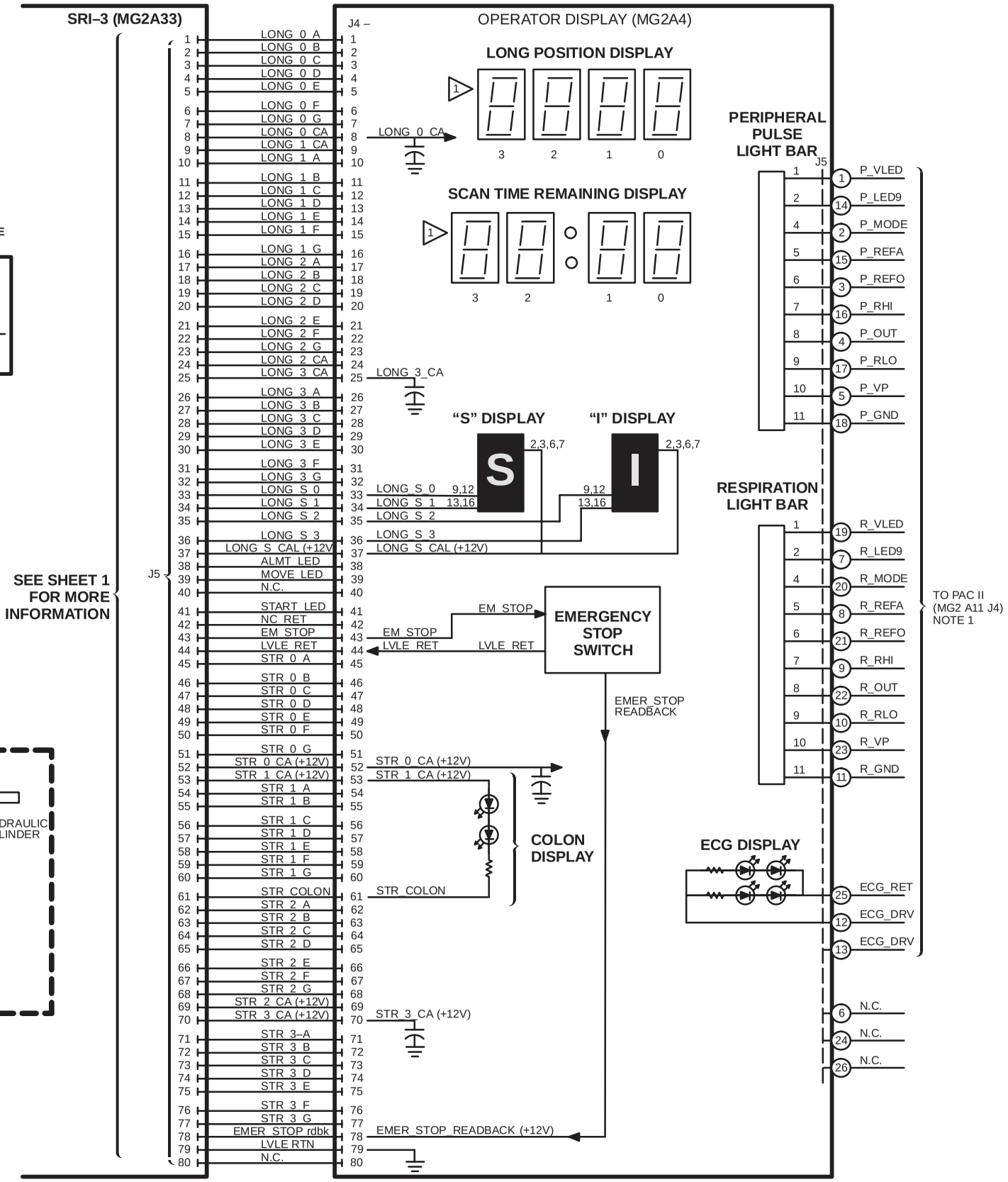

NOTES:

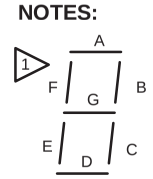

Refer to the following functional block diagrams for additional information. :

1) MGD/RRF/RF

EXCITE HD (12.x), HDx (14.x) & HDxt (15x) PATIENT HANDLING
EXCITE Upgrade
SHEET 2B OF 5

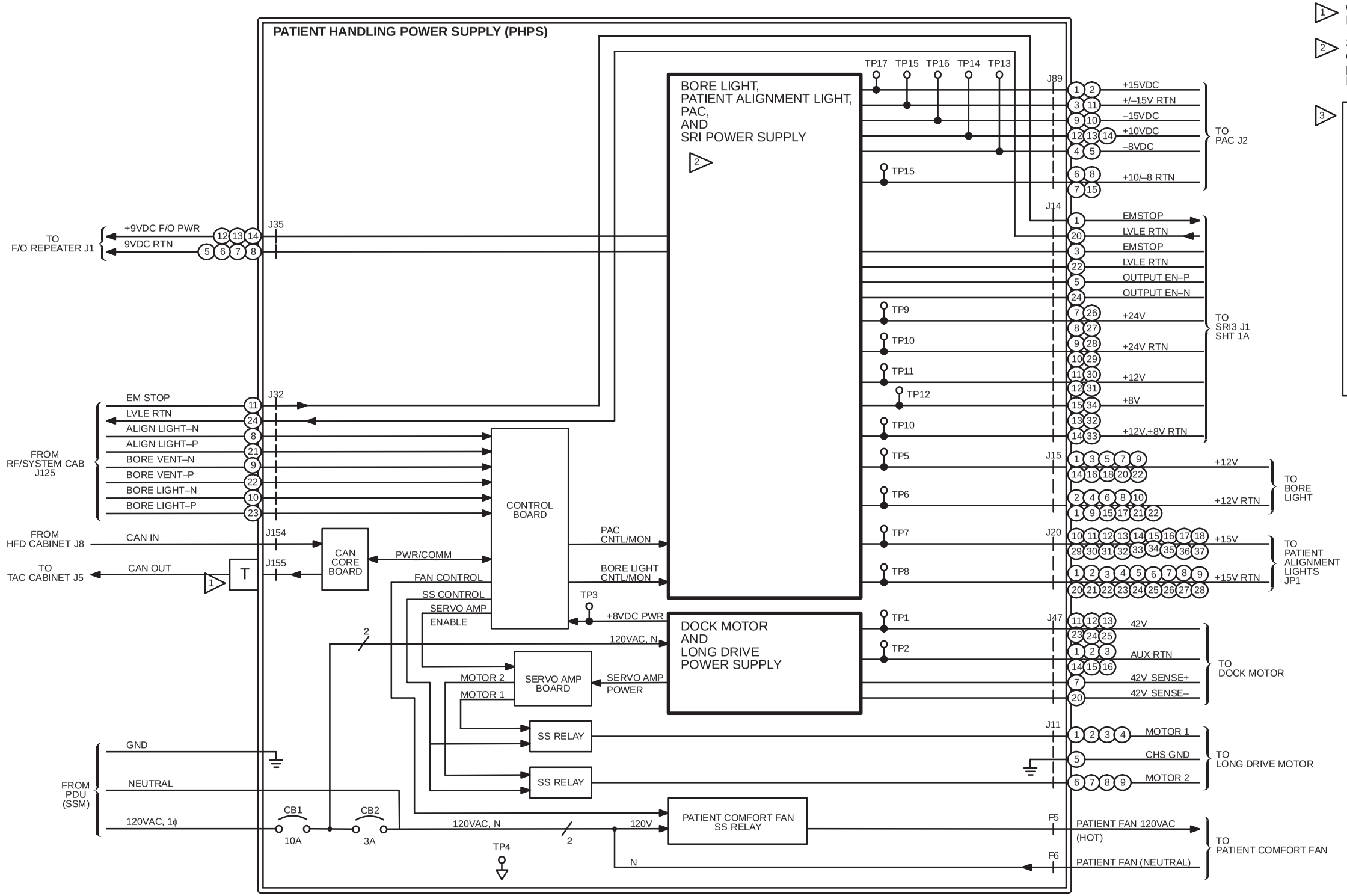

NOTES:

1. OPTIONAL: Used only if High Order Shim (HOS) installed. PP1 PHPS J155 Terminator removed when HOS is installed.
2. Systems equipped with Laser Patient Alignment lights use one type of power supply while those equipped with Halogen patient Alignment lights must use another. See the Renewal Parts manual.
3.

TEST POINT	FUNCTION
TP1	TABLE VOLTS (42VDC)
TP2	TAABLE COM
TP3	CONTROL BD +8V
TP4	+8V COM
TP5	BORE +12V
TP6	BORE COM
TP7	PAL +15V
TP8	PAL COM
TP9	SRI +24V
TP10	SRI COM
TP11	SRI +12V
TP12	SRI +8V
TP13	PAC –8V
TP14	PAC +10V
TP15	PAC COM
TP16	PAC –15V
TP17	PAC +15V

EXCITE HD (12.x), HDx (14.x) & HDxt (15x) PATIENT HANDLING
PATIENT HANDLING POWER SUPPLY (PHPS)
SHEET 3 OF 5

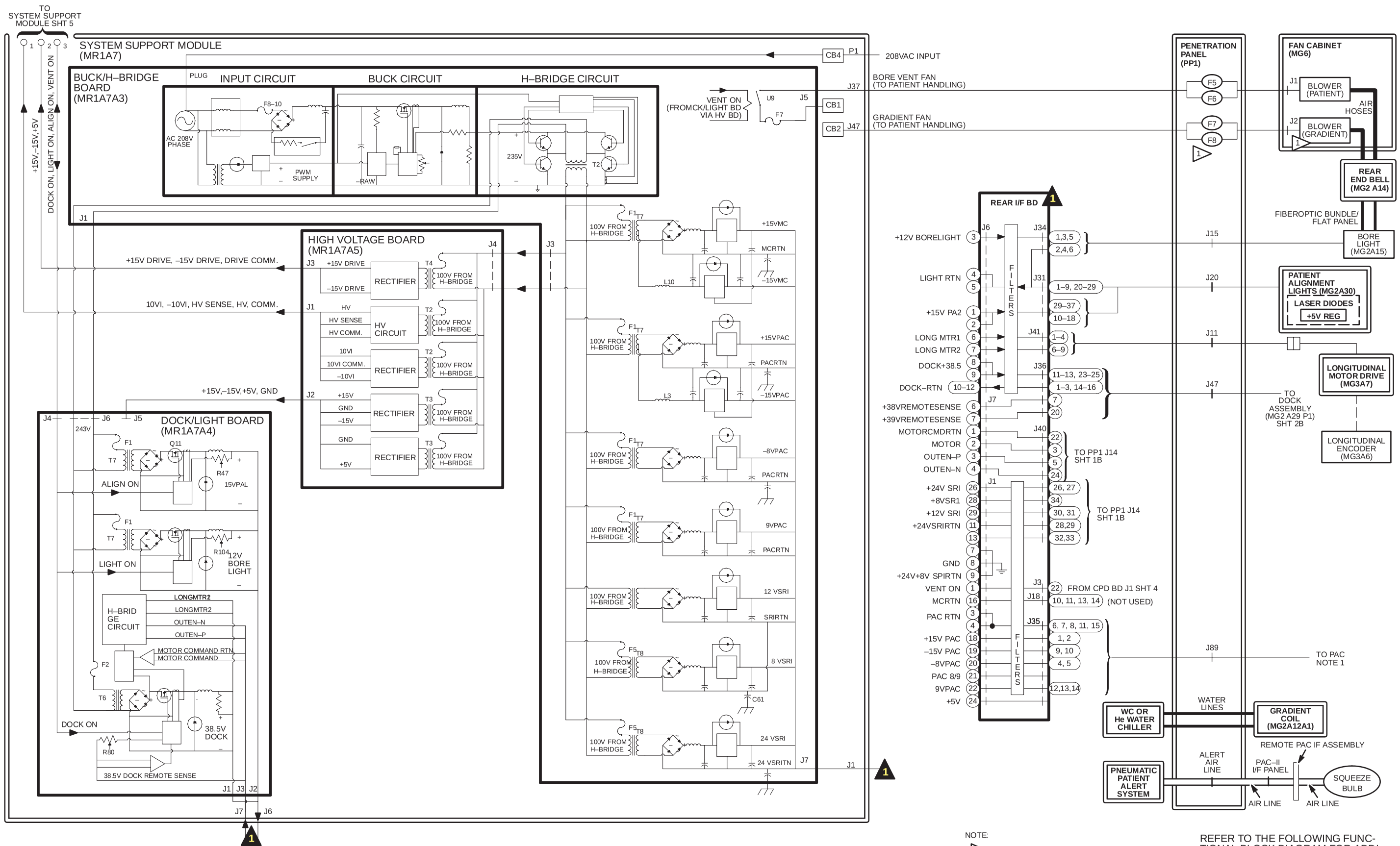

NOTE:
1 F7/F8 AND GRADIENT BLOWER PRESENT ON SYSTEMS WITH BRM BODY COIL.

REFER TO THE FOLLOWING FUNCTIONAL BLOCK DIAGRAM FOR ADDITIONAL INFORMATION:
NOTE:
1) MGD/RRF/RF

EXCITE HD (12.x) PATIENT HANDLING – PATIENT HANDLING – SSM
SHEET 4A OF 5

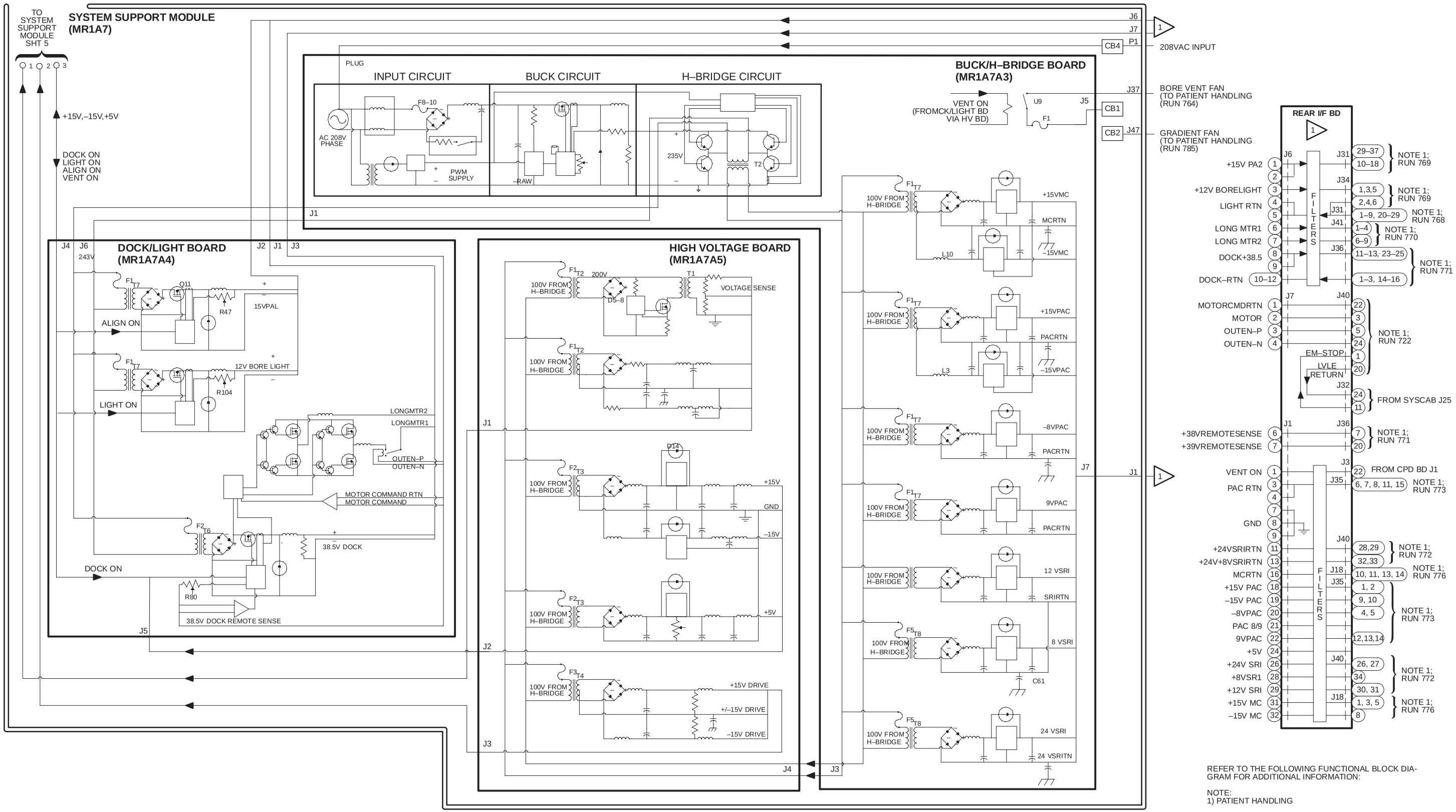

REFER TO THE FOLLOWING FUNCTIONAL BLOCK DIAGRAM FOR ADDITIONAL INFORMATION:

NOTE:
1) PATIENT HANDLING

EXCITE HD (12.x), HDx (14.x) & HDxt (15x) PATIENT HANDLING – SSM
EXCITE Upgrade
SHEET 4B OF 5

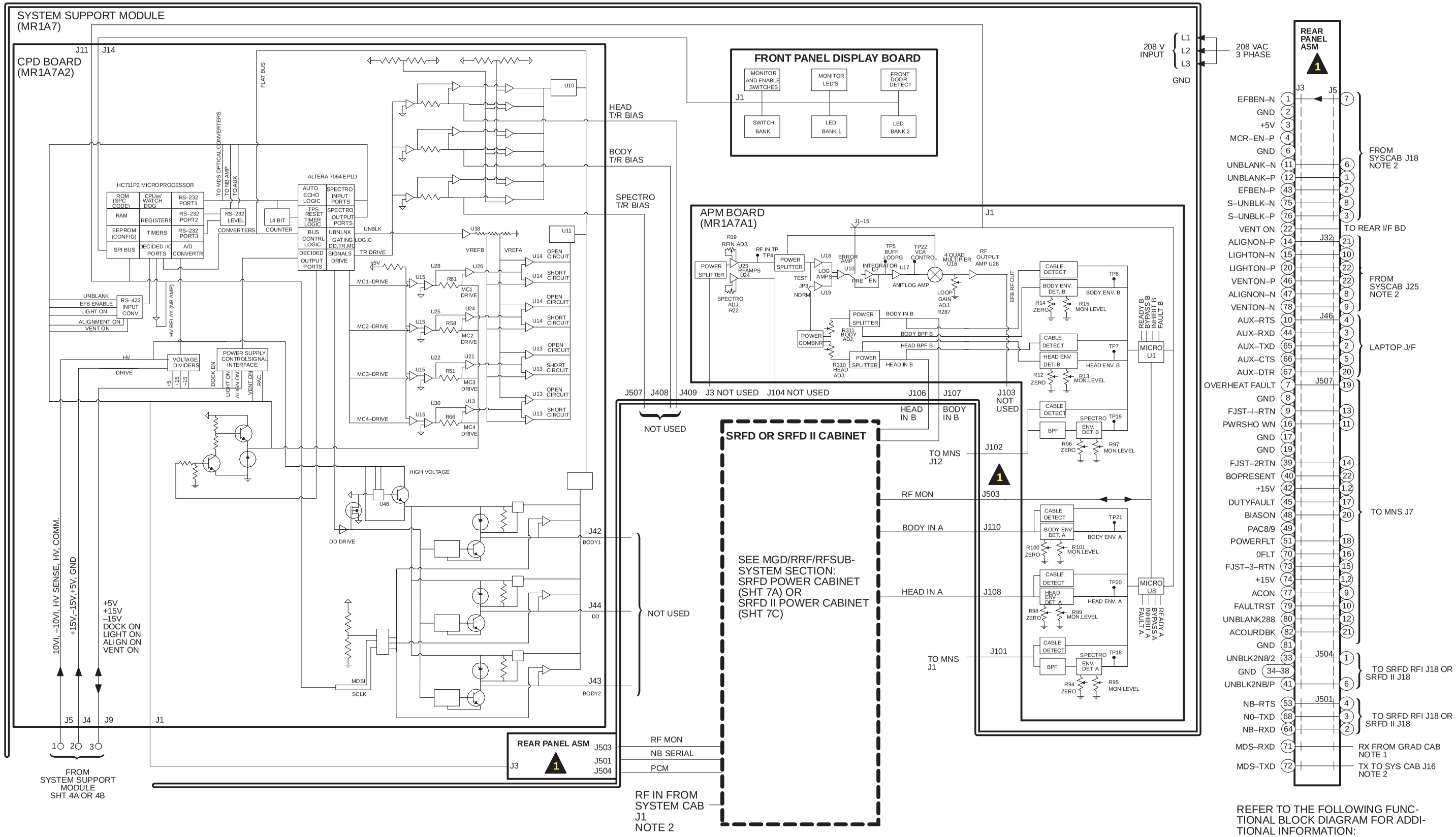

REFER TO THE FOLLOWING FUNCTIONAL BLOCK DIAGRAM FOR ADDITIONAL INFORMATION:

NOTE:
1) GRADIENT
2) MGD/RRF/RF

EXCITE HD (12.x), HDx (14.x) & HDxt (15x) PATIENT HANDLING – SSM
SHEET 5 OF 5

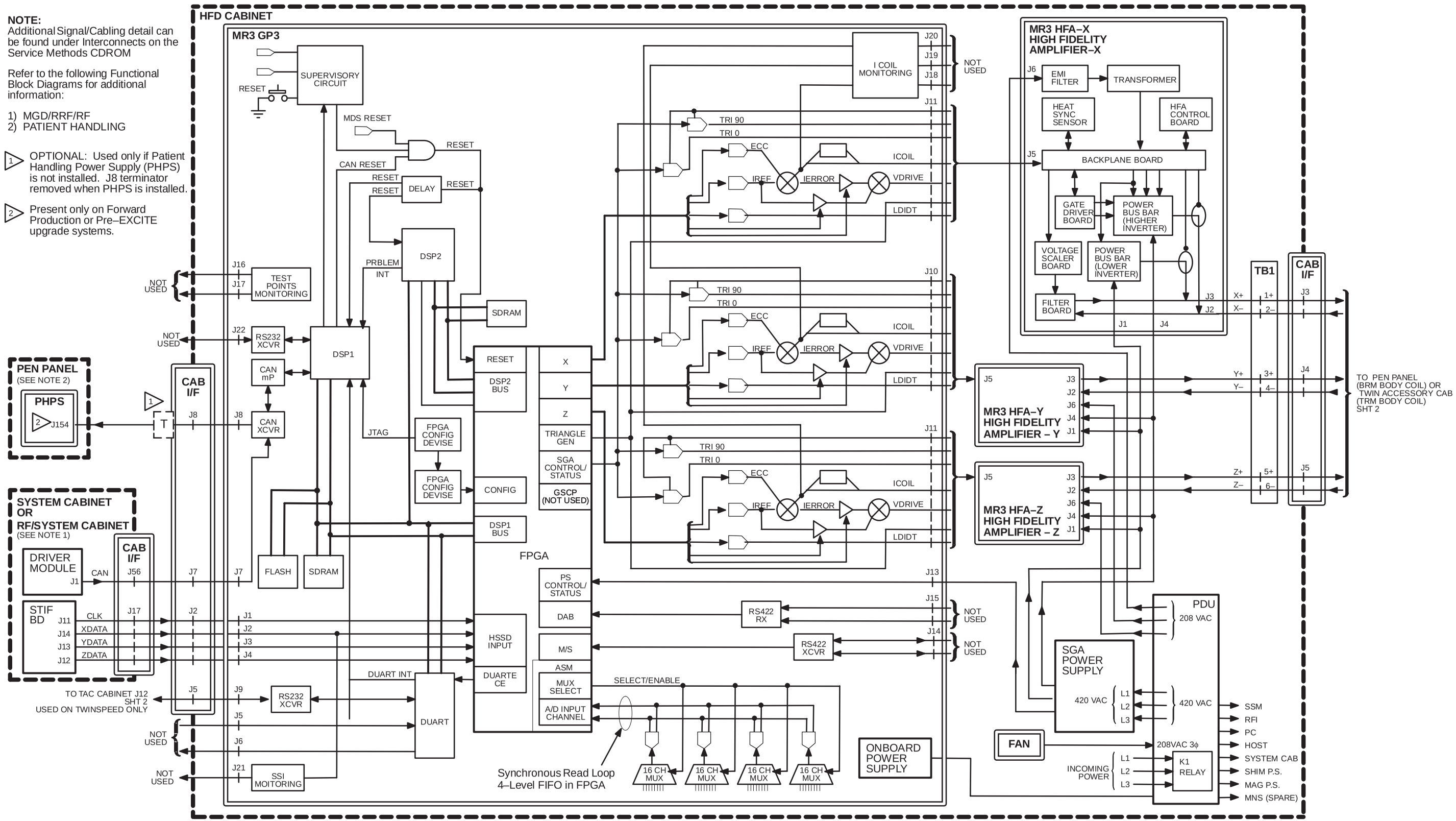

GRADIENT – HFD
SHEET 1A OF 2

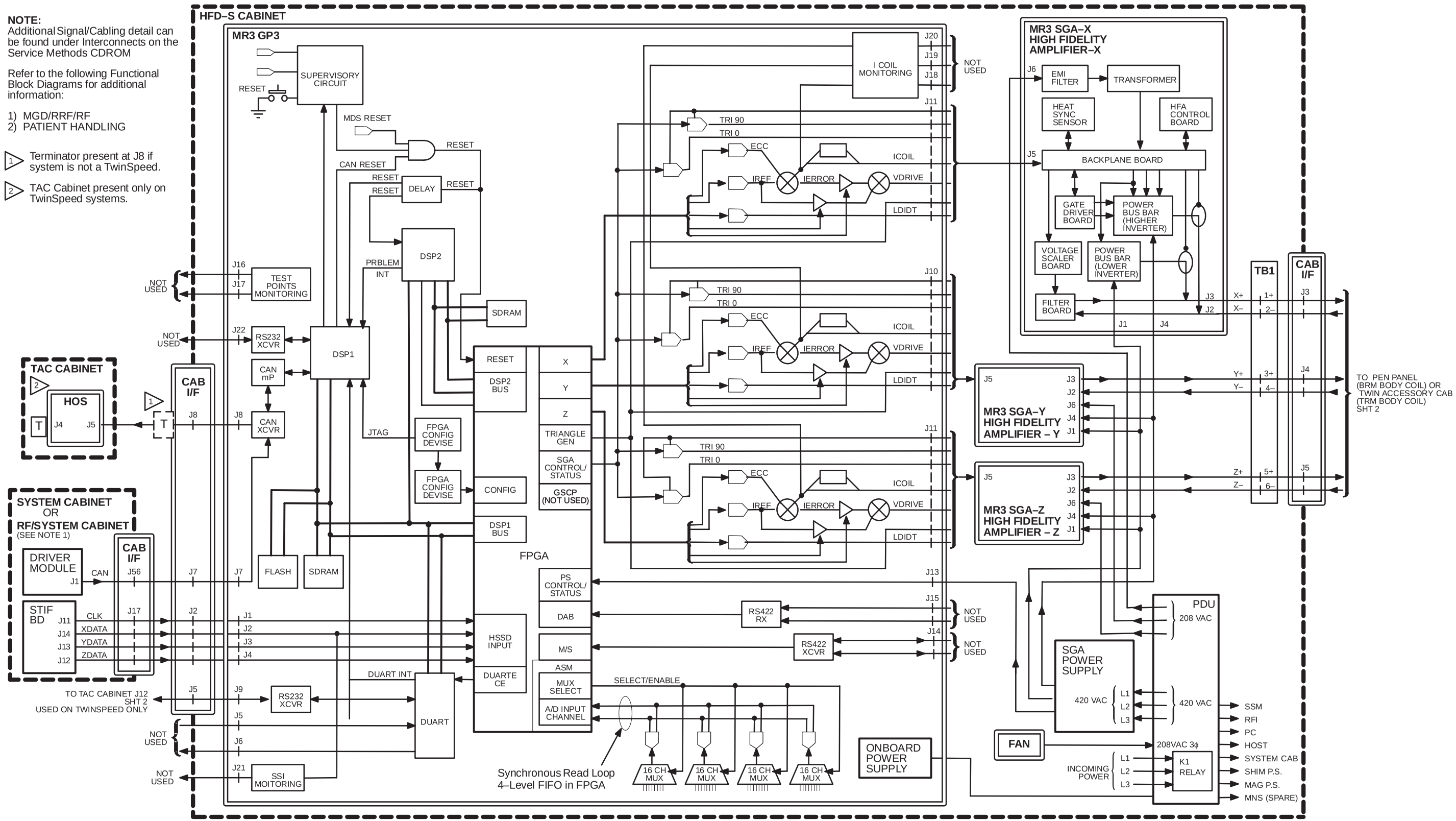

GRADIENT – HFD–S (UPGRADED ACGD)

SHEET 1B OF 2

NOTE:
Refer to the following Functional Block Diagrams for additional information:

1)OVERALL SYSTEM

1 Twin Accessory Cabinet is present only on TwinSpeed systems (with TRM body coil).

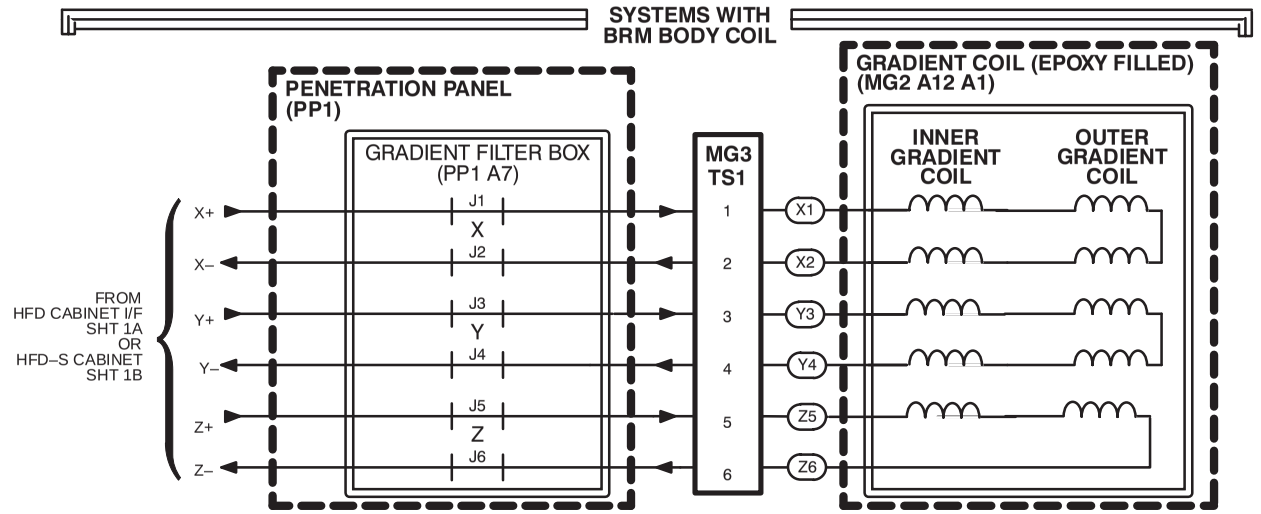

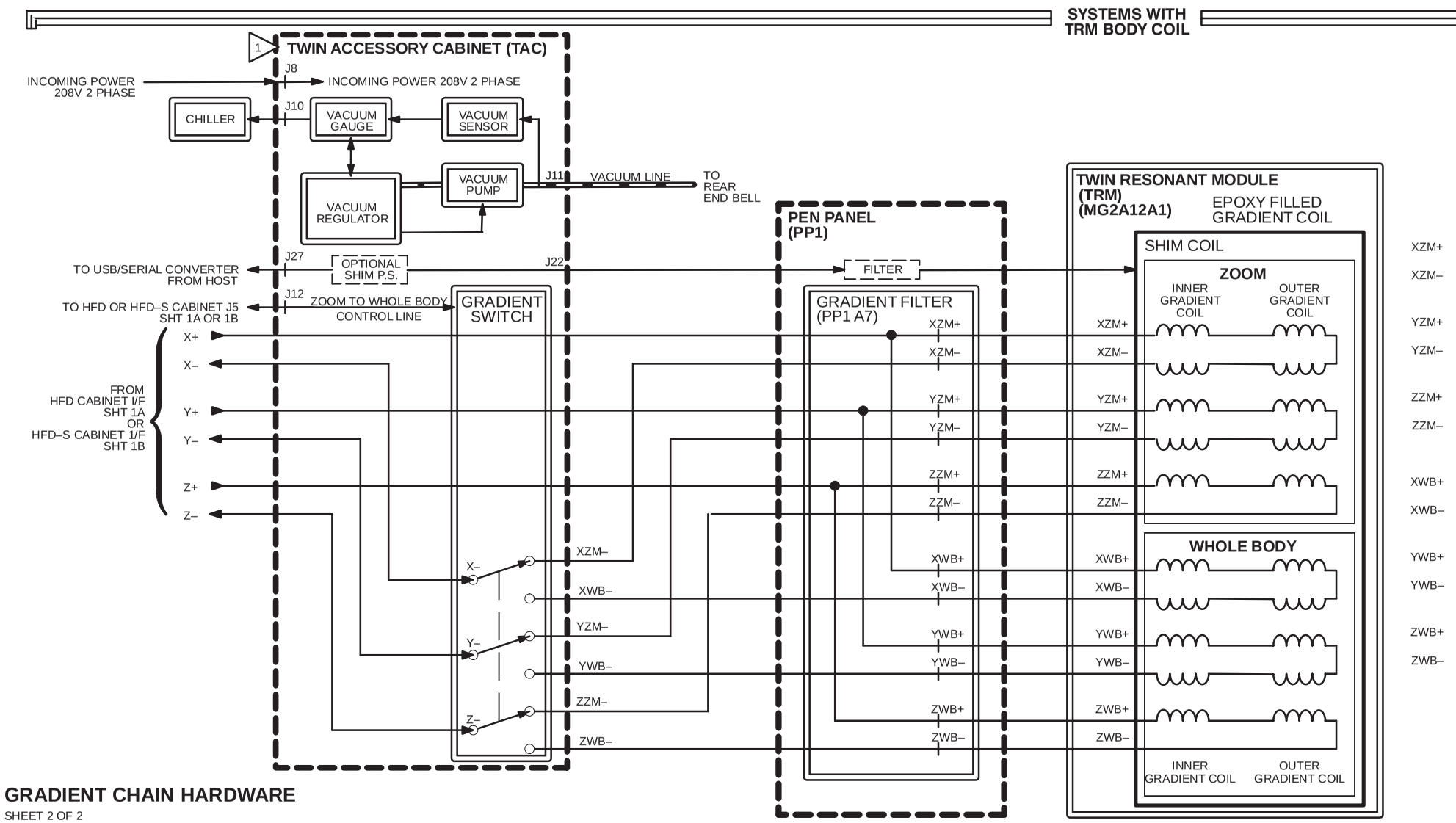

GRADIENT CHAIN HARDWARE
SHEET 2 OF 2

1.5T TRM PANG BLOCK CONFIGURATION

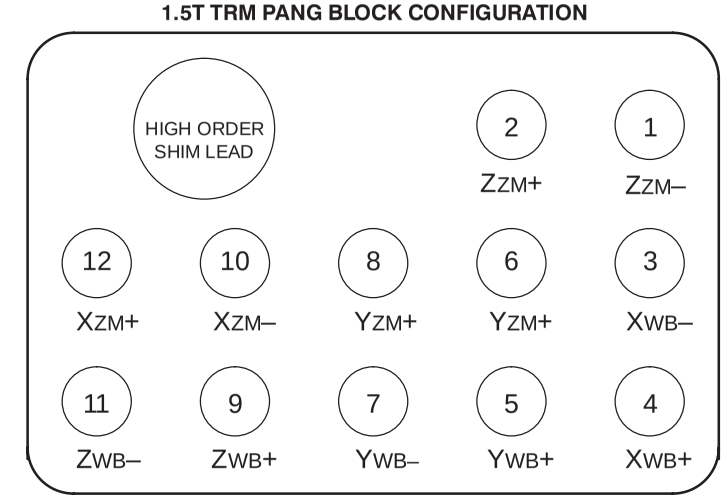

CABLE #	MARKING/DESCRIPTION
1	ZM Z6 In (–)
2	ZM Z5 Out (+)
3	WB X8 180 (–)
4	WB X7 0 (+)
5	WB Y9 270 (+)
6	ZM Y4 90 (–)
7	WB Y10 90 (–)
8	ZM Y3 270 (+)
9	WB Z11 Out (+)
10	ZM X2 180 (–)
11	WB Z12 In (–)
12	ZM X1 0 (+)

PDU

TABLE OF CONTENTS

Note:

PDU found in Vendor Manuals only. (SEE SERVICE METHODS CDROM)

MGD/RRF/RF (1.5T)

TABLE OF CONTENTS

SECTION **PAGE**

1 – MGD/RRF/RF SUBSYSTEM (1.5T)

HD MGD CHASSIS – HOST, RECEIVE, AND RECON FUNCTIONS (Forward Production & Upgrades) 1–1
HDx, HDxt MGD CHASSIS – HOST, RECEIVE, AND RECON FUNCTIONS (Forward Production & Upgrades) 1–2
HDx HDxt MGD CHASSIS – VOLUME RECON ENGINE (Forward Production & Upgrades) 1–3
HD, HDx & HDxt MGD CHASSIS – SEQUENCE SEGMENT 1–4
HD, HDx & HDxt RRF CHASSIS INTERCONNECT BLOCK DIAGRAM 1 OF 2A (4 and 8 Channel Systems) 1–5
HD, HDx & HDxt RRF CHASSIS INTERCONNECT BLOCK DIAGRAM 1 OF 2B (16 Channel – Forward Production & Upgrades) 1–6
HDx & HDxt RRF CHASSIS INTERCONNECT BLOCK DIAGRAM 1 OF 4C (32 Channel – Forward Production & Upgrades) 1–7
HD, HDx & HDxt RRF CHASSIS INTERCONNECT BLOCK DIAGRAM 2 OF 2A (4 and 8 Channel Systems) 1–8
HD, HDx & HDxt RRF CHASSIS INTERCONNECT BLOCK DIAGRAM 2a OF 2B (Channels 1–8 of 16 Channel – Forward Production & Upgrades) 1–9
HD, HDx & HDxt RRF CHASSIS INTERCONNECT BLOCK DIAGRAM 2a OF 4C (Channels 1–8 of 32 Channel – Forward Production & Upgrades) 1–10
HD, HDx & HDxt RRF CHASSIS INTERCONNECT BLOCK DIAGRAM 2b OF 2B
HD, HDx & HDxt RRF CHASSIS INTERCONNECT BLOCK DIAGRAM 2b OF 4C (Channels 9–16 of 16 or 32 Channel – Forward Production & Upgrades) 1–11
HDx & HDxt RRF CHASSIS INTERCONNECT BLOCK DIAGRAM 2c OF 4C (Channels 17–24 of 32 Channel – Forward Production & Upgrades) 1–12
HDx & HDxt RRF CHASSIS INTERCONNECT BLOCK DIAGRAM 2d OF 4C (Channels 25–32 of 32 Channel – Forward Production & Upgrades) 1–13
HD, HDx & HDxt RRF RECEIVE CHAIN CONNECTIONS 1–14
HD DRIVER MODULE (Upgrade with SSM) 1–15
HD DRIVER MODULE (Forward Production, RFS Cabinet, no SSM) 1–16
HDx & HDxt DRIVER MODULE (Upgrade with SSM) 1–17
HDx & HDxt DRIVER MODULE (Forward Production, RFS Cabinet, no SSM) 1–18
HD, HDx & HDxt SRFD POWER CABINET – SYSTEM SUPPORT MODULE (Upgrades Only) 1–19
HD, HDx & HDxt SRFD CABINET – RFI AND SOLID STATE AMPS (Upgrades Only) 1–20
HD & HDx SRFD II POWER CABINET – SYSTEM SUPPORT MODULE (Upgrades Only) 1–21
HD, HDx & HDxt SRFD II RF AMPLIFIER 1–22
HD, HDx & HDxt MAGNET ROOM & RELATED COMPONENTS (12.x – Forward Production & Upgrades) (14.x , 15.x– Upgrades) 1–23

TABLE OF CONTENTS (Continued)

SECTION **PAGE**

1 – MGD/RRF/RF SUBSYSTEM (1.5T) (Continued)

HDx & HDxt MAGNET ROOM & RELATED COMPONENTS (14.x, 15.x – Forward Production) 1–24
HD & HDx MULTI–COIL MODULES 1–25
HDx & HDxt 8 CHANNEL & 16 CHANNEL MULTI–COIL 1–26
HDx & HDxt 32 CHANNEL MULTI–COIL 1–27
HDx & HDxt LPCA MULTI–COIL INTERFACE ASM 1–28
HD & HDx MULTI–COIL ADAPTER (J10) 1–29
HD, HDx & HDxt PHYSIOLOGICAL ACQUISITION CONTROLLER II 1–30
HD, HDx & HDxt 16 CHANNEL SWITCH (1.5T) 1–31
HDx & HDxt 8 DEPOPULATED 8 CHANNEL SWITCH (1.5T) 1–32
HD 8 CHANNEL MULITCOIL “A” AND “B” CONNECTOR 1–33
HDx & HDxt MULITCOIL “A+” CONNECTOR (Forward Production) 1–34
HDx & HDxt MULITCOIL “B8” CONNECTOR (Forward Production) 1–35
HDx & HDxt MULITCOIL “B16” AND “C16” CONNECTOR (Forward Production) 1–36
HD, HDx & HDxt ASC CHASSIS 1–37
HD, HDx & HDxt MNS RF Amplifier (Optional Forward Production MNS) 1–38
HD, HDx & HDxt MNS Interconnects (Optional Forward Production MNS) 1–39
HD, HDx & HDxt MNS Interconnects) (Optional MNS Upgrade Only) 1–40
HD MCR II TOOL AND CABLE 1–41
HDx & HDxt MCR III TOOL AND CABLE 1–42
HD MCR II TOOL – 8 CHANNEL CONNECTOR 1–43
HDx & HDxt MCR III TOOL – 8 CHANNEL CONNECTOR 1–44

NOTE:
Additional Signal/Cabling detail can be found under Interconnects on the Service Methods CDROM.

2 – MGD/RRF/RF SUBSYSTEM SUPPLEMENTAL SCHEMATICS (1.5T)

HEAD & BODY PREAMP SCHEMATIC (46–264442S) 2–1
HV DYNAMIC DISABLE FILTER MODULE SCHEMATIC 2–2
HEAD T/R PREAMP FILTER BOARD (2295844, 3 SHEETS) 2–3
T/R BOARD SCHEMATIC (2133404S) 2–6
MULTICOIL MODULE (2295846) 2–7
MOTHER BOARD (2295860, 5 SHEETS) 2–8

NOTE:
Additional Signal/Cabling detail can be found under Interconnects on the Service Methods CDROM.

SECTION 1 – MGD/RRF/RF SUBSYSTEM (1.5T)

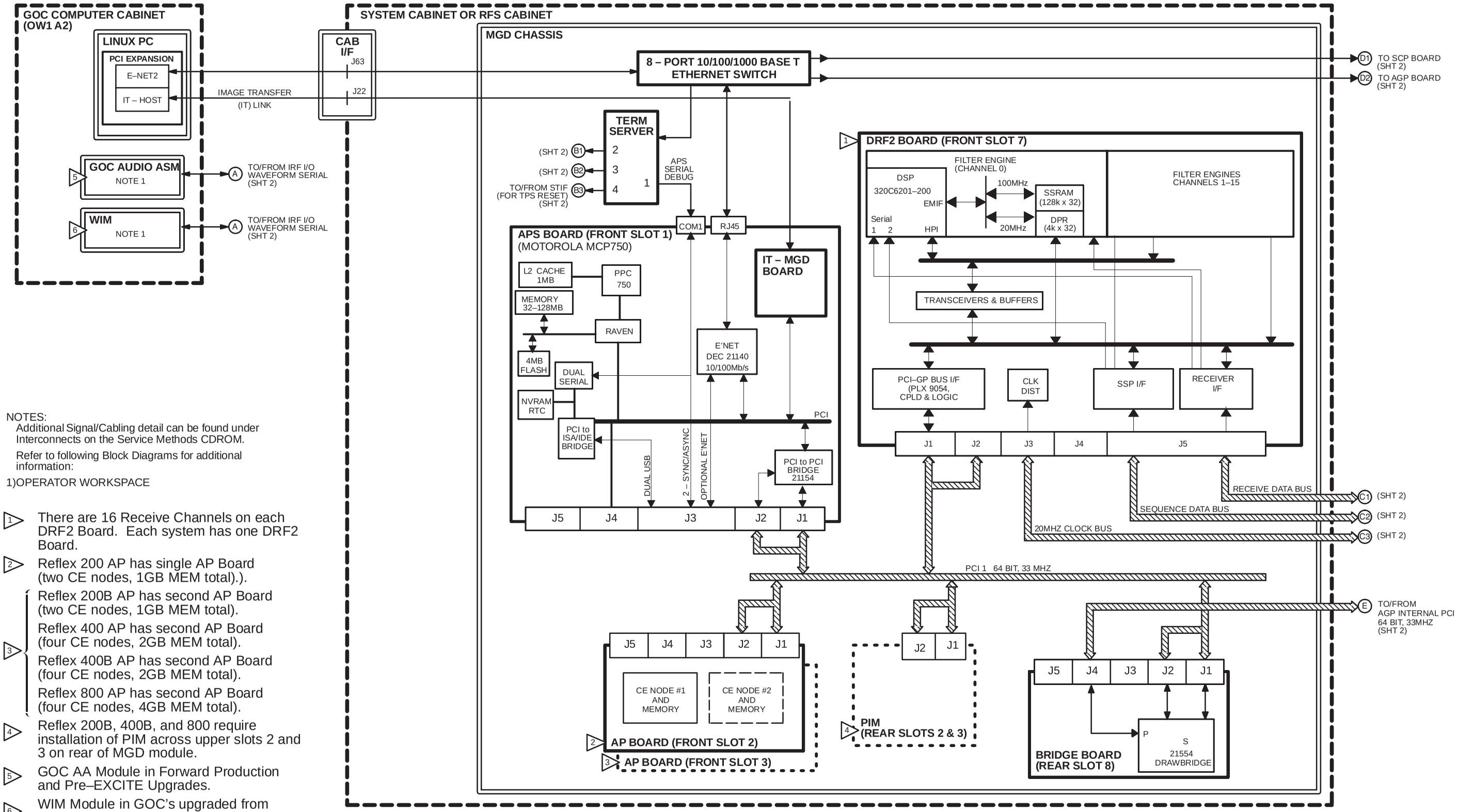

NOTES:
Additional Signal/Cabling detail can be found under Interconnects on the Service Methods CDROM.

Refer to following Block Diagrams for additional information:

1)OPERATOR WORKSPACE

1. There are 16 Receive Channels on each DRF2 Board. Each system has one DRF2 Board.
2. Reflex 200 AP has single AP Board (two CE nodes, 1GB MEM total).).
3. Reflex 200B AP has second AP Board (two CE nodes, 1GB MEM total).
   Reflex 400 AP has second AP Board (four CE nodes, 2GB MEM total).
   Reflex 400B AP has second AP Board (four CE nodes, 2GB MEM total).
   Reflex 800 AP has second AP Board (four CE nodes, 4GB MEM total).
4. Reflex 200B, 400B, and 800 require installation of PIM across upper slots 2 and 3 on rear of MGD module.
5. GOC AA Module in Forward Production and Pre–EXCITE Upgrades.
6. WIM Module in GOC's upgraded from EXCITE.

EXCITE HD (12.x) MGD/RRF/RF SUBSYSTEM
(Forward Production & Upgrades)
MGD CHASSIS – HOST, RECEIVE, AND RECON FUNCTIONS
SHEET 1A OF 16

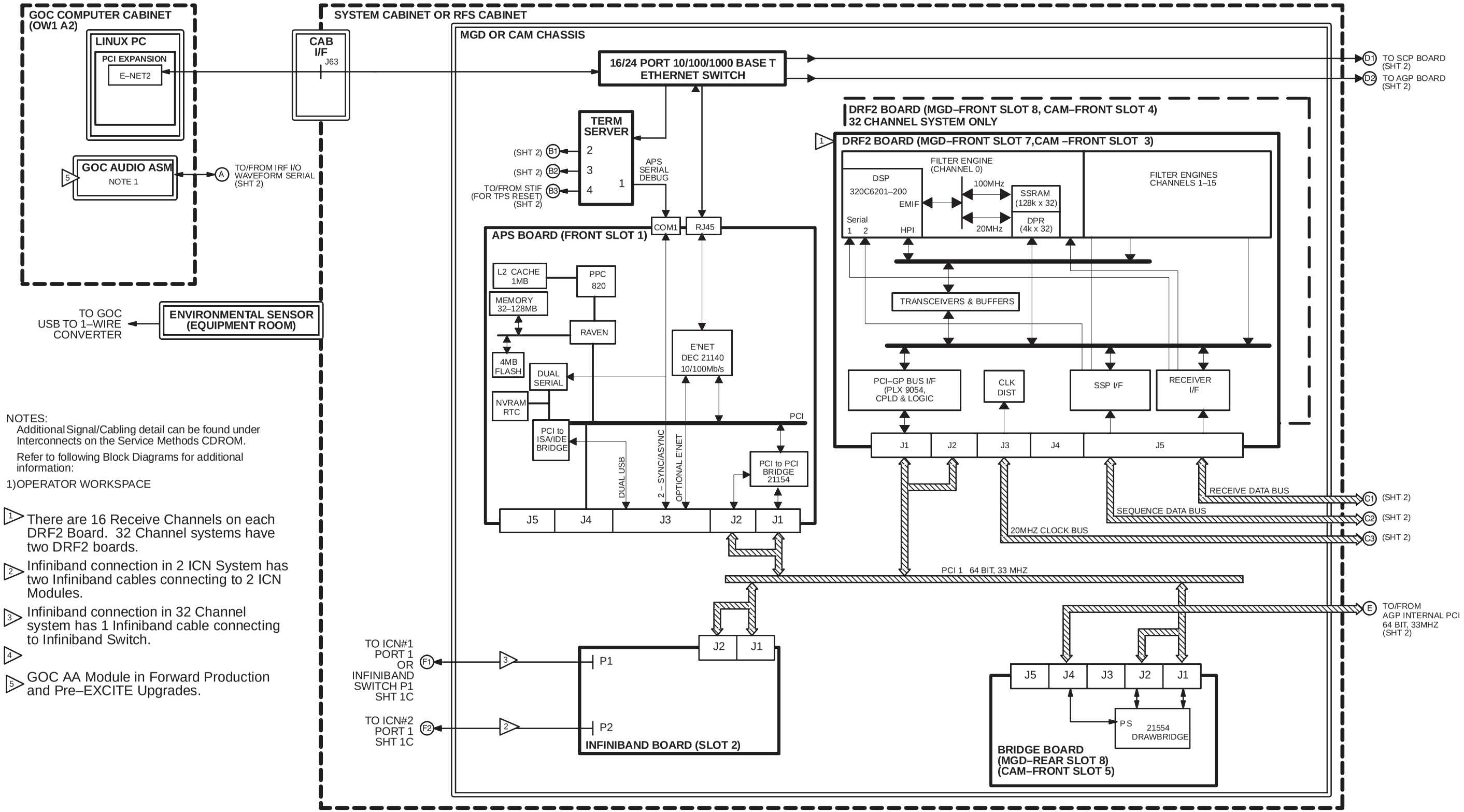

NOTES:

Additional Signal/Cabling detail can be found under Interconnects on the Service Methods CDROM.

Refer to following Block Diagrams for additional information:

1) OPERATOR WORKSPACE

1. There are 16 Receive Channels on each DRF2 Board. 32 Channel systems have two DRF2 boards.
2. Infiniband connection in 2 ICN System has two Infiniband cables connecting to 2 ICN Modules.
3. Infiniband connection in 32 Channel system has 1 Infiniband cable connecting to Infiniband Switch.
4.
5. GOC AA Module in Forward Production and Pre–EXCITE Upgrades.

HDx (14.x) & HDxt (1.5.x) MGD/RRF/RF SUBSYSTEM
(Forward Production & Upgrades)
MGD CHASSIS – HOST, RECEIVE, AND RECON FUNCTIONS
SHEET 1B OF 16

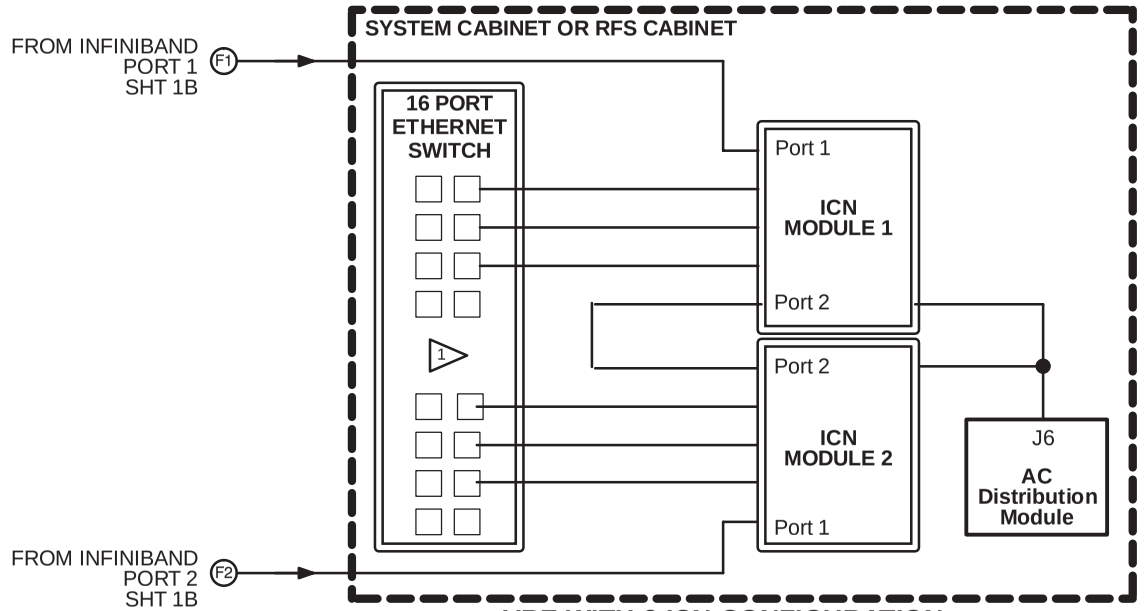

VRE WITH 2 ICN CONFIGURATION

NOTES:
Additional Signal/Cabling detail can be found under Interconnects on the Service Methods CDROM.

Refer to following Block Diagrams for additional information:

1)OPERATOR WORKSPACE

1 Other connections to 16/24 port Ethernet Switch on sheet 1B.

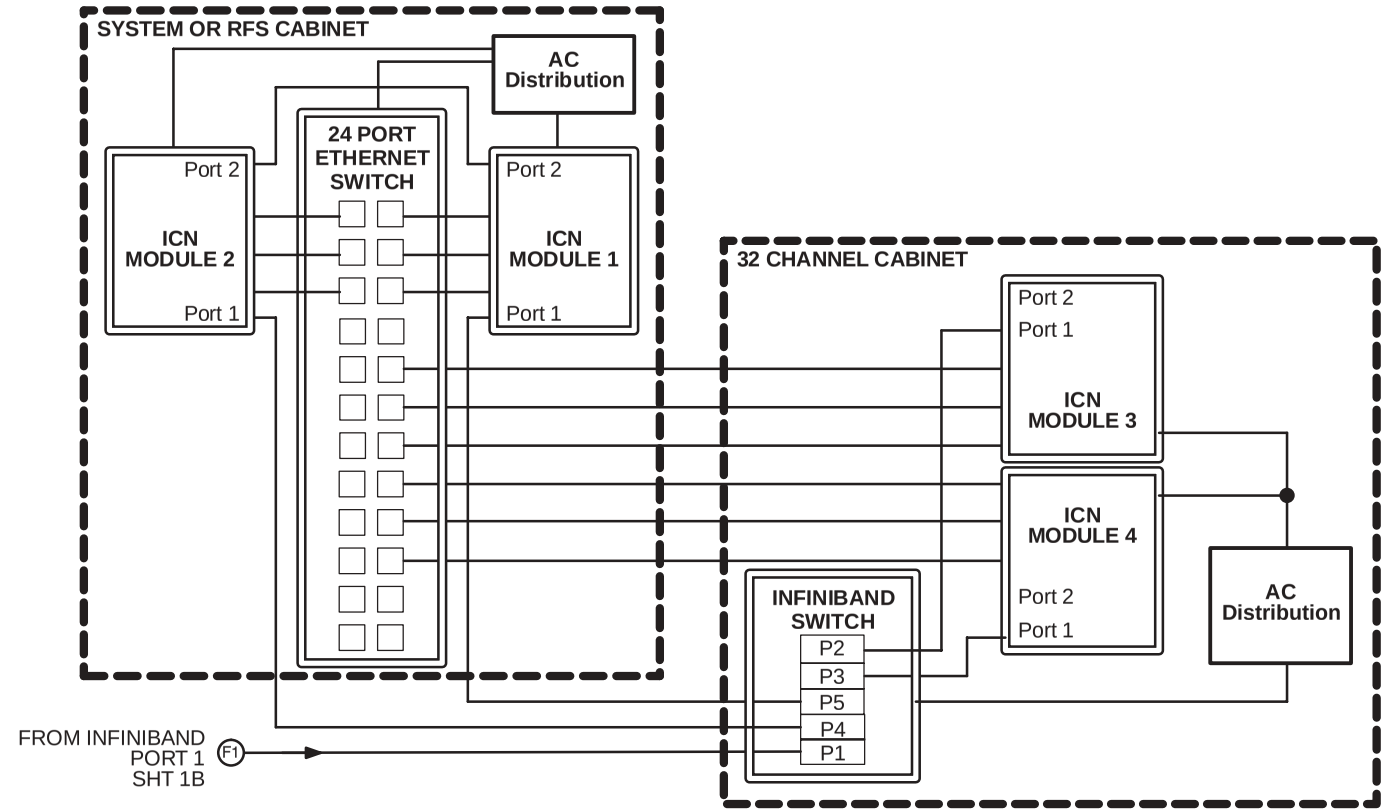

VRE WITH 4 ICN CONFIGURATION WITH INFINIBAND SWITCH

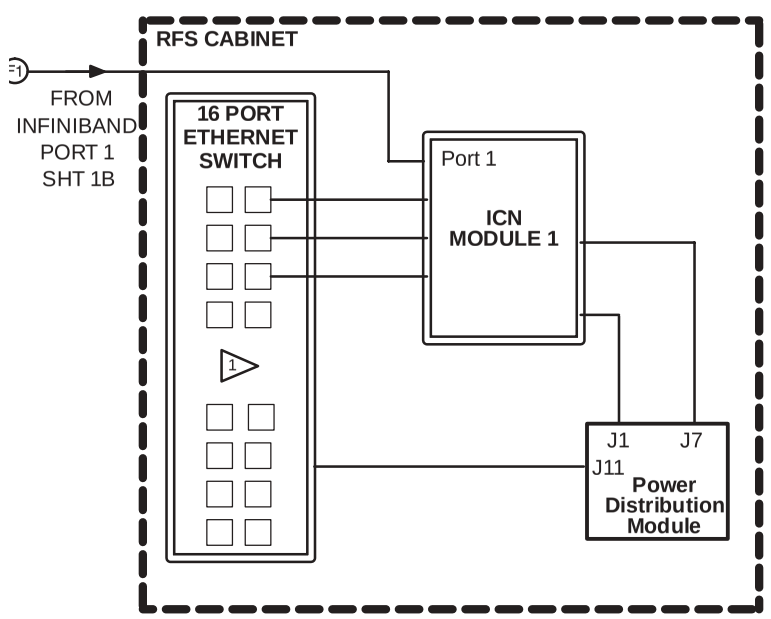

VRE WITH 1 ICN CONFIGURATION CONTAINING 5127452–3, 5337894–3, or 5337894–4 ICN

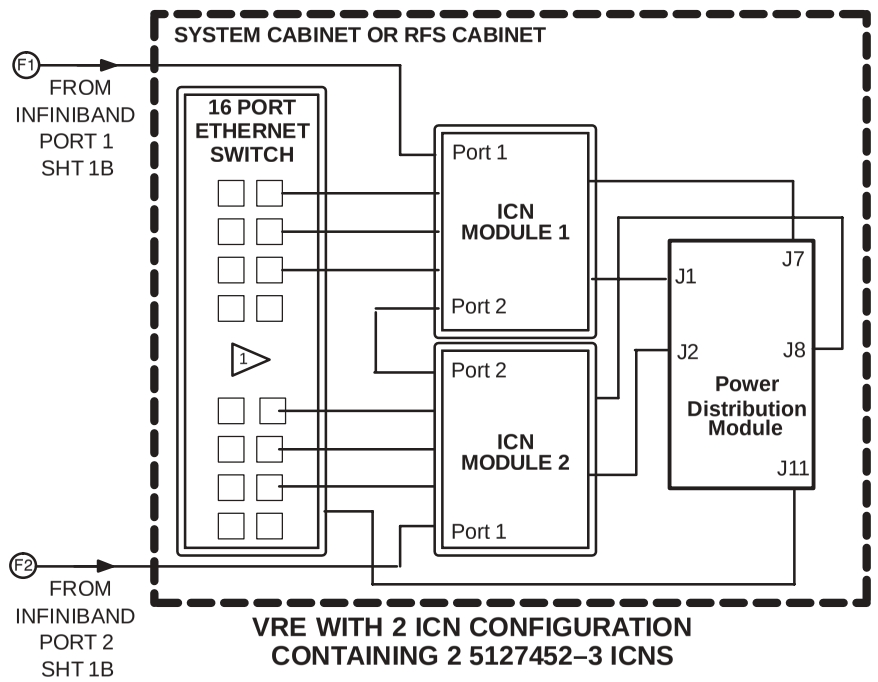

VRE WITH 2 ICN CONFIGURATION CONTAINING 2 5127452–3 ICNS

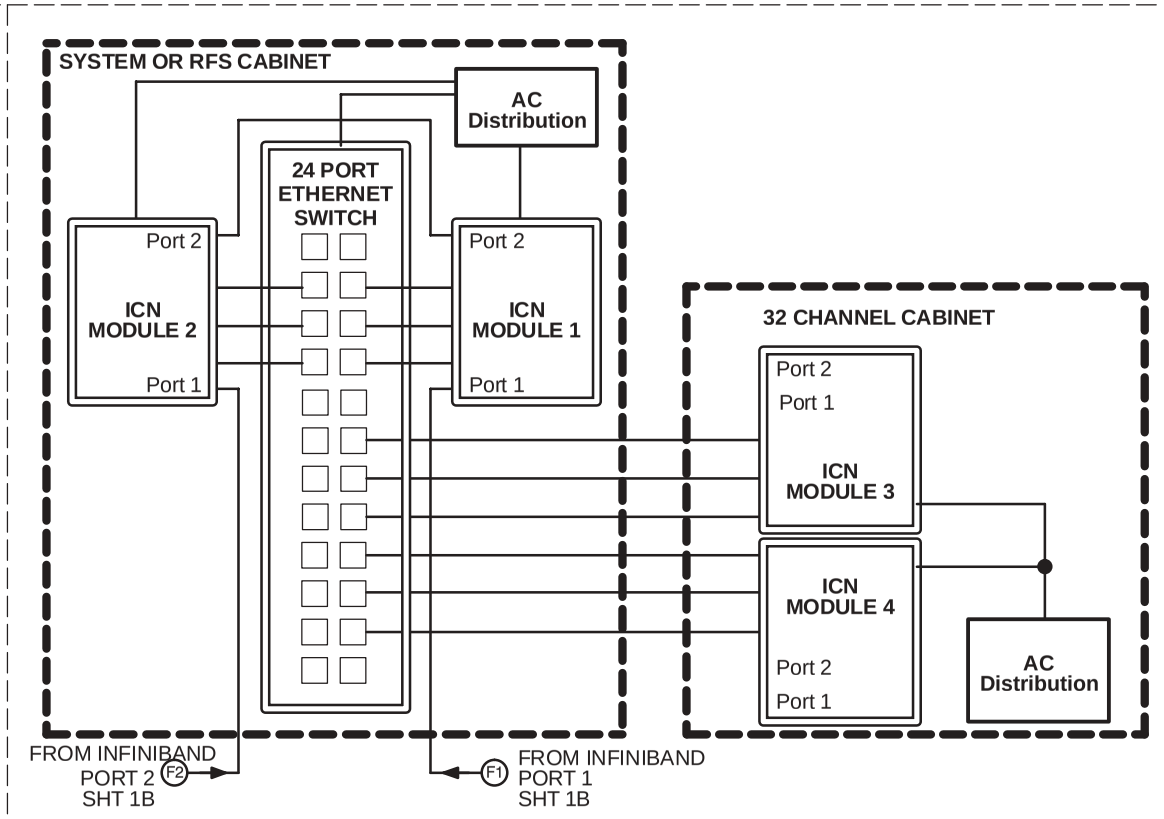

VRE WITH 4 ICN CONFIGURATION WITHOUT INFINIBAND SWITCH

HDx (14.x) & HDxt (1.5.x) MGD/RRF/RF SUBSYSTEM
(Forward Production & Upgrades)
VOLUME RECON ENGINE
SHEET 1C OF 16

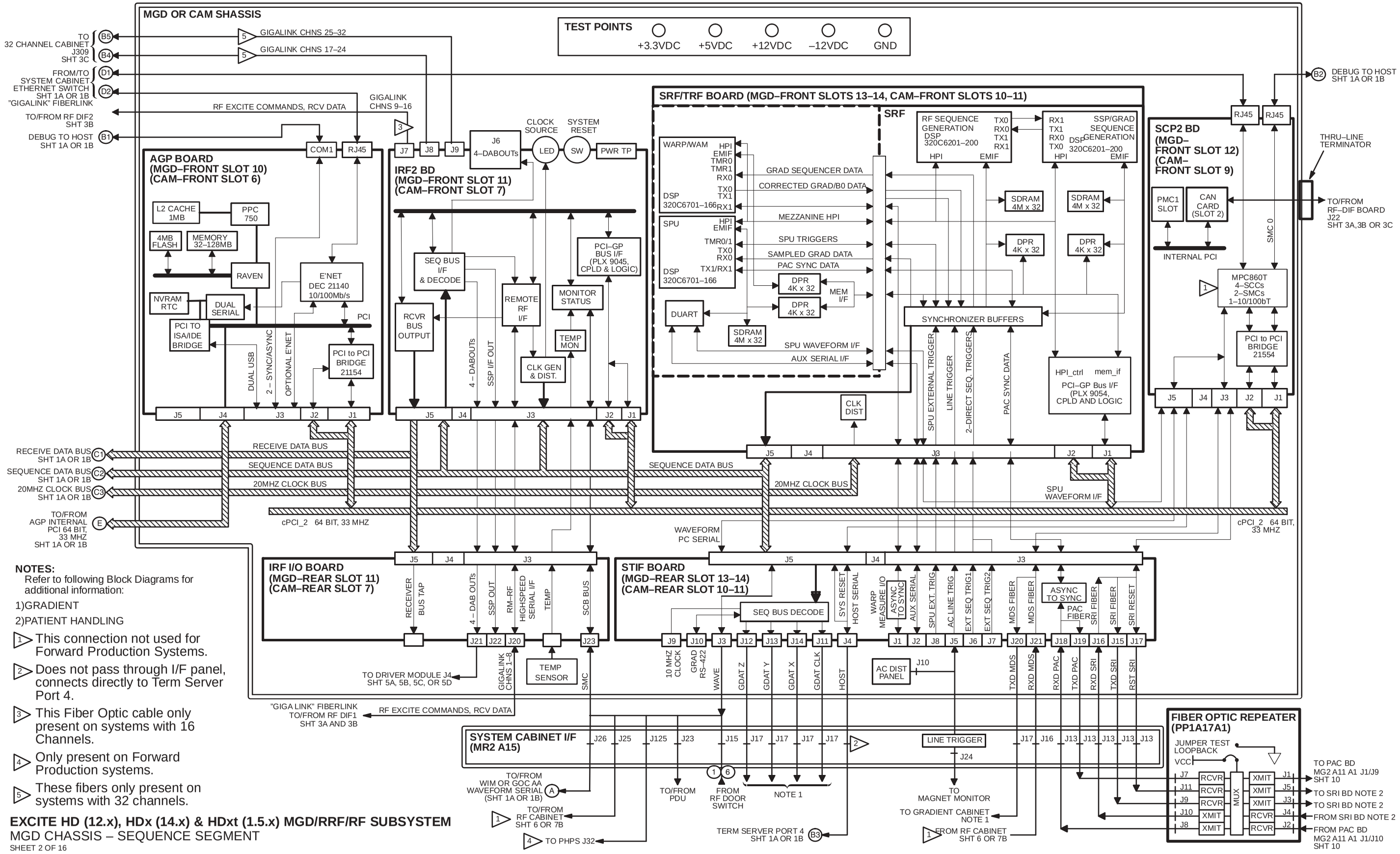

NOTES:
Refer to following Block Diagrams for additional information:

1)GRADIENT

2)PATIENT HANDLING

1 This connection not used for Forward Production Systems.

2 Does not pass through I/F panel, connects directly to Term Server Port 4.

3 This Fiber Optic cable only present on systems with 16 Channels.

4 Only present on Forward Production systems.

5 These fibers only present on systems with 32 channels.

EXCITE HD (12.x), HDx (14.x) & HDxt (1.5.x) MGD/RRF/RF SUBSYSTEM
MGD CHASSIS – SEQUENCE SEGMENT
SHEET 2 OF 16

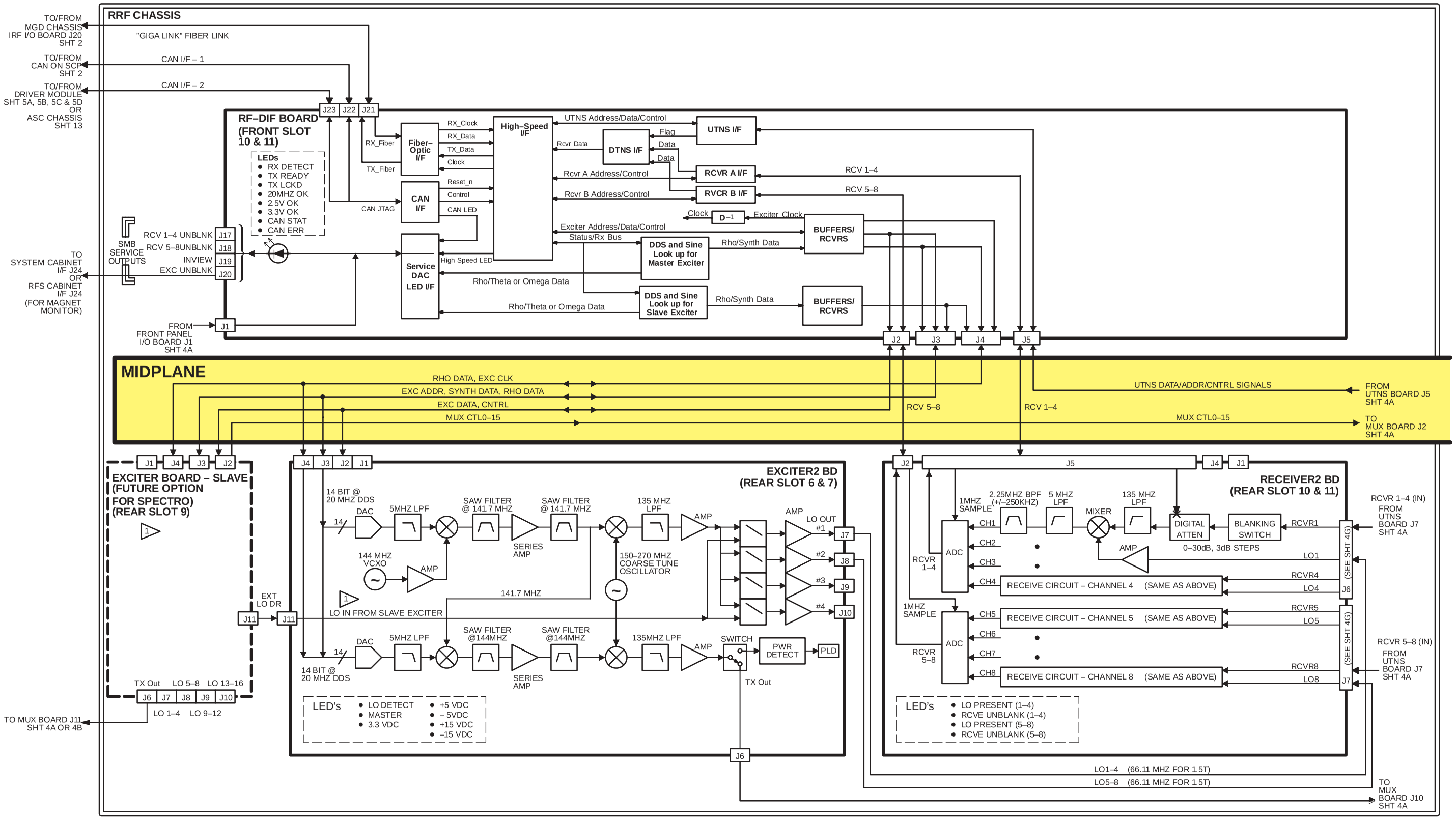

EXCITE HD (12.x), HDx (14.x) & HDxt (1.5.x) MGD/RRF/RF SUBSYSTEM
(4 and 8 Channel Systems)
RRF CHASSIS INTERCONNECT BLOCK DIAGRAM 1 OF 2A
SHEET 3A OF 16

NOTE:

1 Slave Exciter is a future option for Spectro.

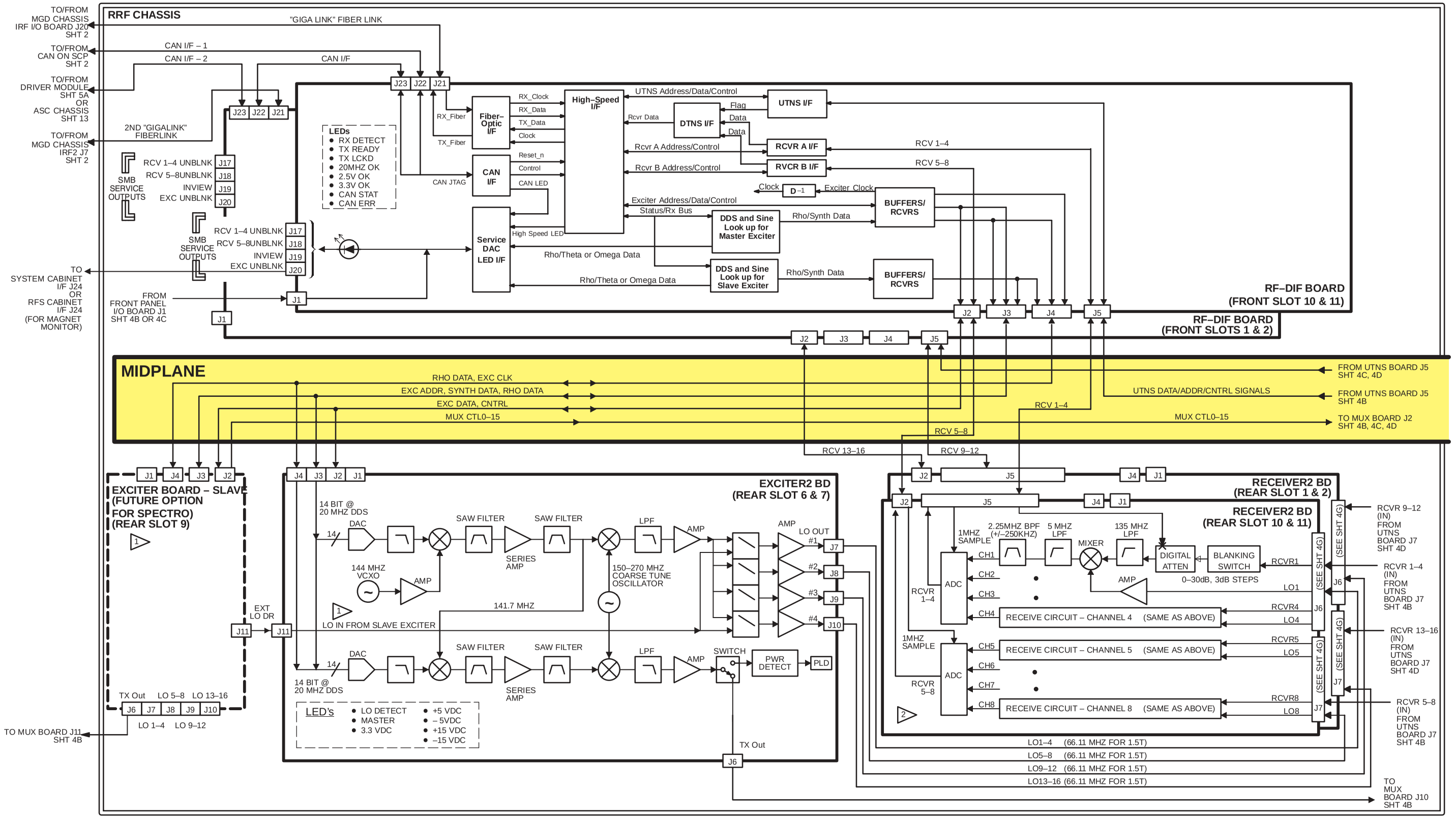

EXCITE HD (12.x), HDx (14.x) & HDxt (1.5.x) MGD/RRF/RF SUBSYSTEM
(16 Channel – Forward Production & Upgrades)
RRF CHASSIS INTERCONNECT BLOCK DIAGRAM 1 OF 2B
SHEET 3B OF 16

NOTE:
1 Slave Exciter is a future option for Spectro.

2 LED's
- LO PRESENT (1–4)
- RCVE UNBLANK (1–4)
- LO PRESENT (5–8)
- RCVE UNBLANK (5–8)

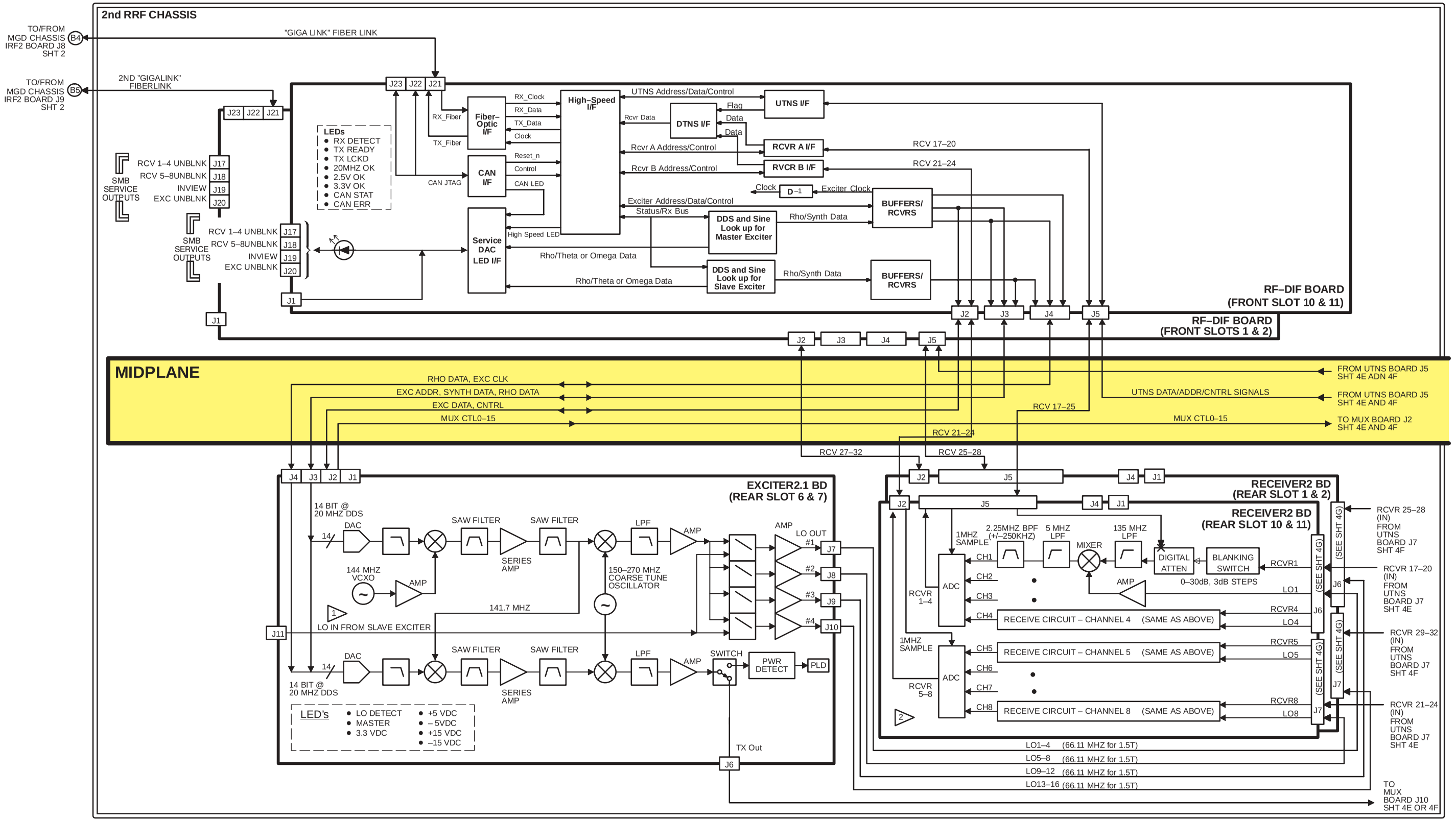

HDx (14.x) & HDxt (1.5.x) MGD/RRF/RF SUBSYSTEM
(32 Channel – Forward Production & Upgrades)
2nd RRF CHASSIS INTERCONNECT BLOCK DIAGRAM 1 OF 4C
SHEET 3C OF 16

NOTE: LED's
- LO PRESENT (1–4)
- RCVE UNBLANK (1–4)
- LO PRESENT (5–8)
- RCVE UNBLANK (5–8)

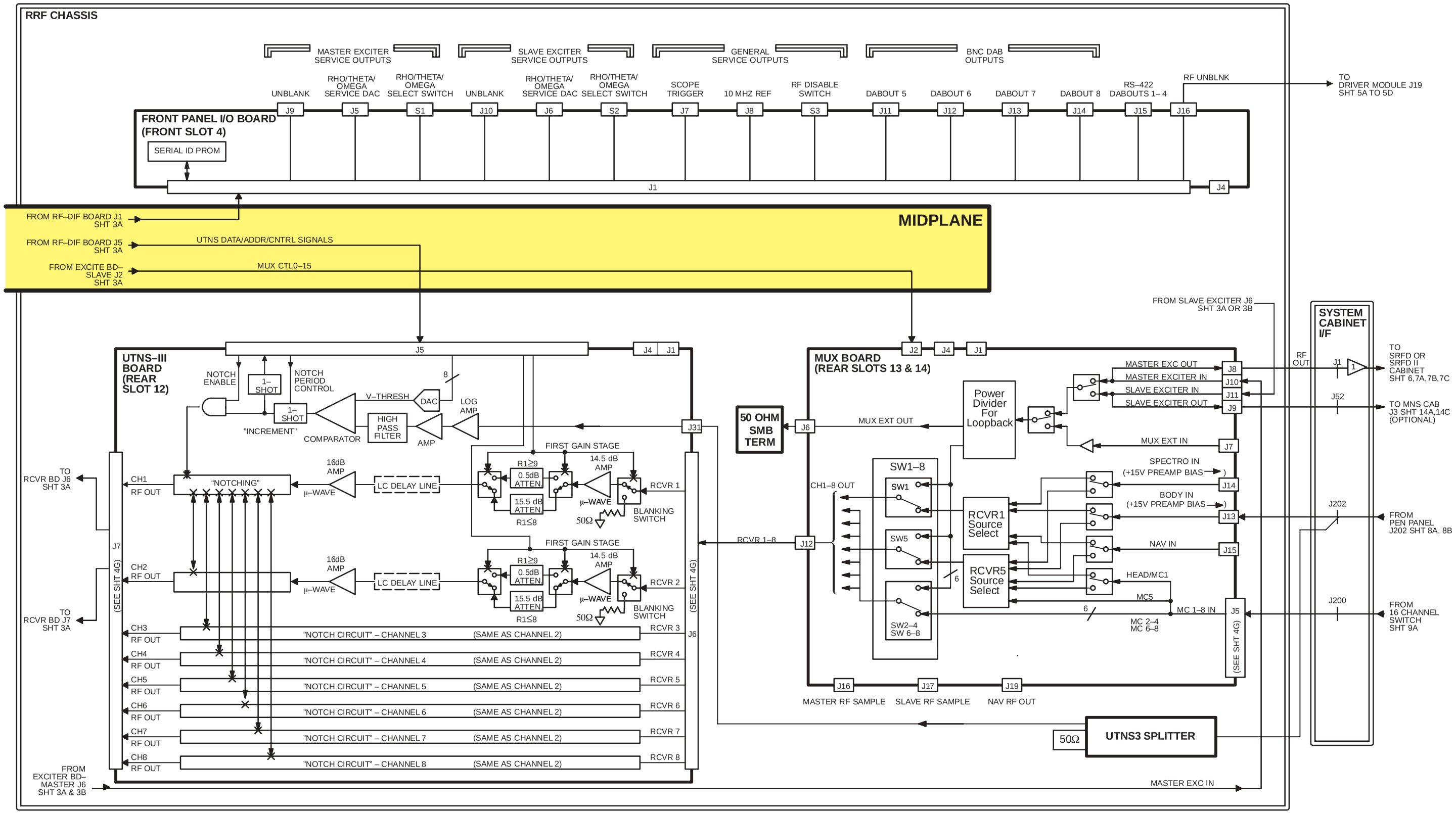

EXCITE HD (12.x), HDx (14.x) & HDxt (1.5.x) MGD/RRF/RF SUBSYSTEM
(4 and 8 Channel Systems)
RRF CHASSIS INTERCONNECT BLOCK DIAGRAM 2 OF 2A (8 Channel)
SHEET 4A OF 16

NOTE:
1 J1 not present in RF System Cabinet.

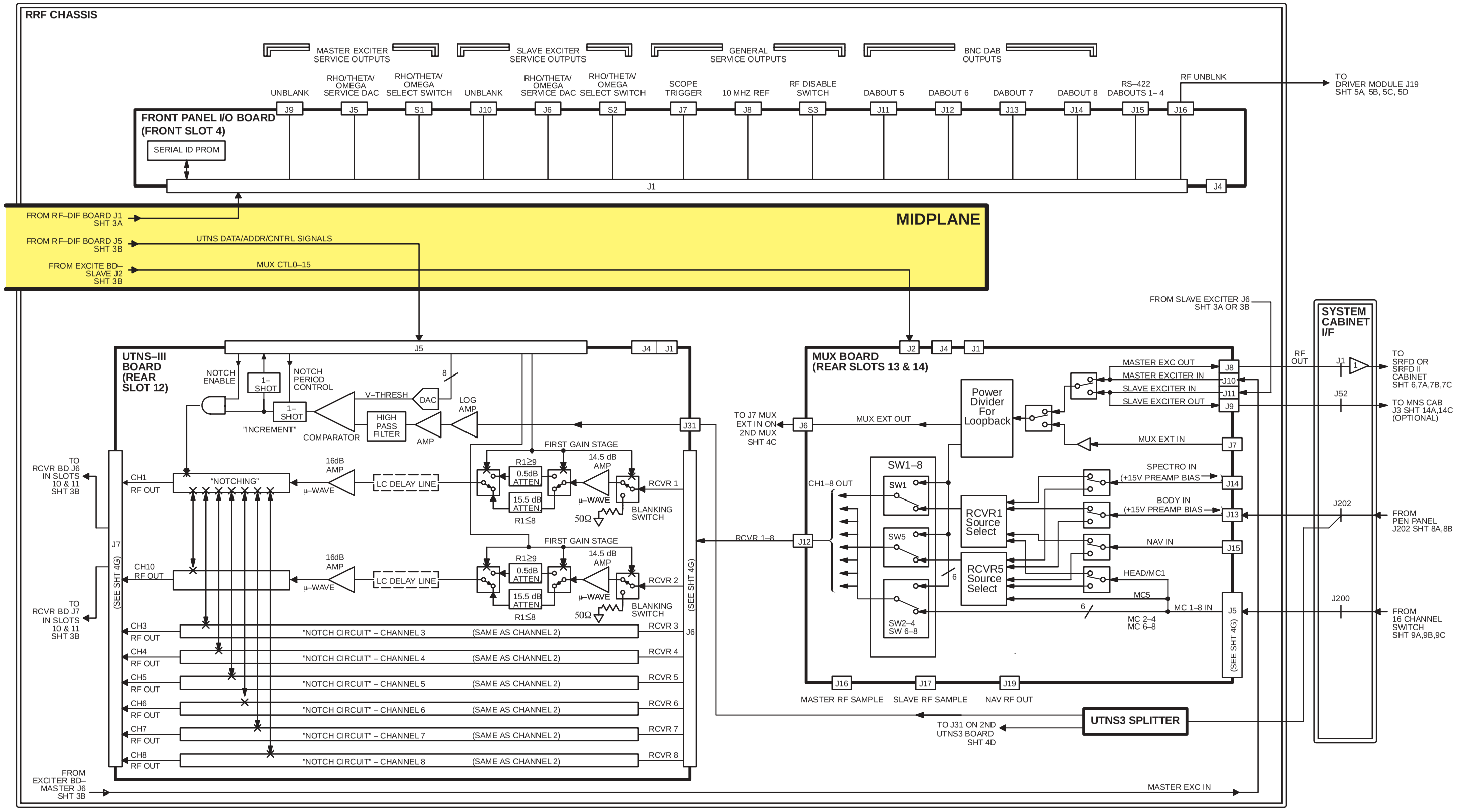

EXCITE HD (12.x), HDx (14.x) & HDxt (1.5.x) MGD/RRF/RF SUBSYSTEM
(Channels 1–8 of 16 Channel – Forward Production & Upgrades)
RRF CHASSIS INTERCONNECT BLOCK DIAGRAM 2a OF 2B (16 Channel)
SHEET 4B OF 16

NOTE:

1 J1 not present in RF System Cabinet.

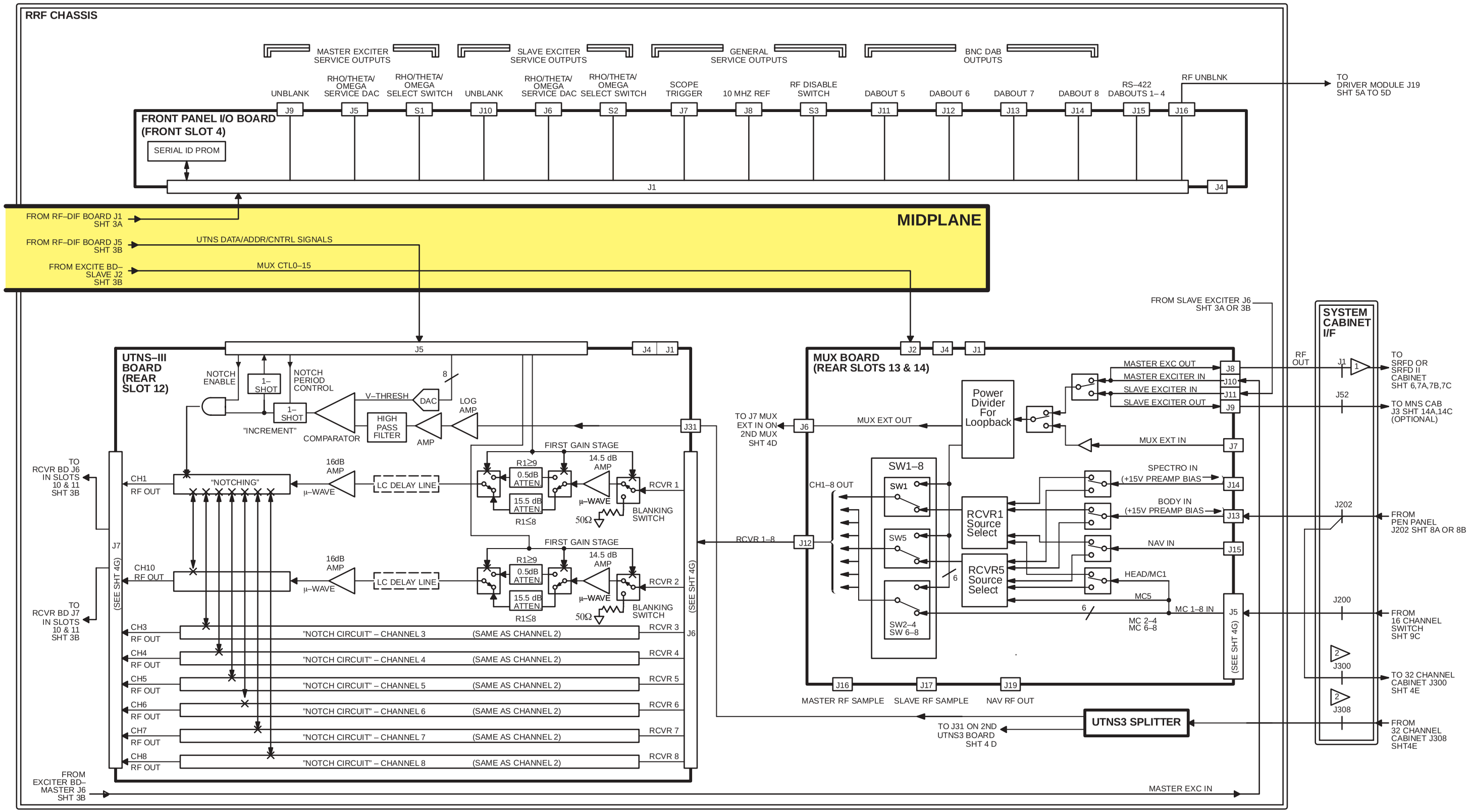

EXCITE HD (12.x), HDx (14.x) & HDxt (1.5.x) MGD/RRF/RF SUBSYSTEM
(Channels 1–8 of 32 Channel – Forward Production & Upgrades)
RRF CHASSIS INTERCONNECT BLOCK DIAGRAM 2a OF 4C (32 Channel)
SHEET 4C OF 16

NOTE:

1 J1 not present in RF System Cabinet.

2 32 Channel systems only.

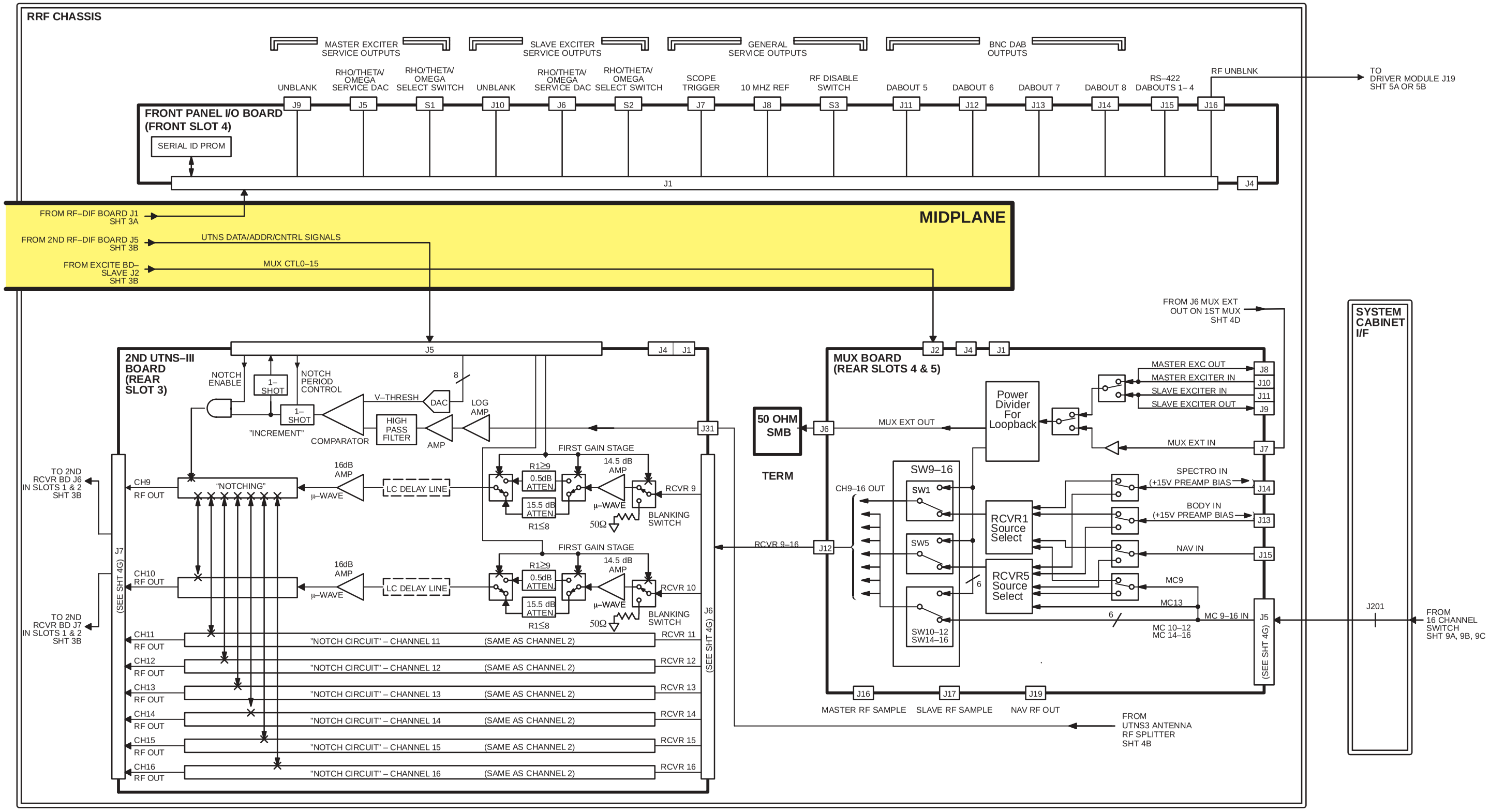

EXCITE HD (12.x), HDx (14.x) & HDxt (1.5.x) MGD/RRF/RF SUBSYSTEM
(Channels 9–16 of 16 or 32 Channel – Forward Production & Upgrades)
RRF CHASSIS INTERCONNECT BLOCK DIAGRAM 2b OF 2B (16 Channel)
RRF CHASSIS INTERCONNECT BLOCK DIAGRAM 2b OF 4C (32 Channel)
SHEET 4D OF 16

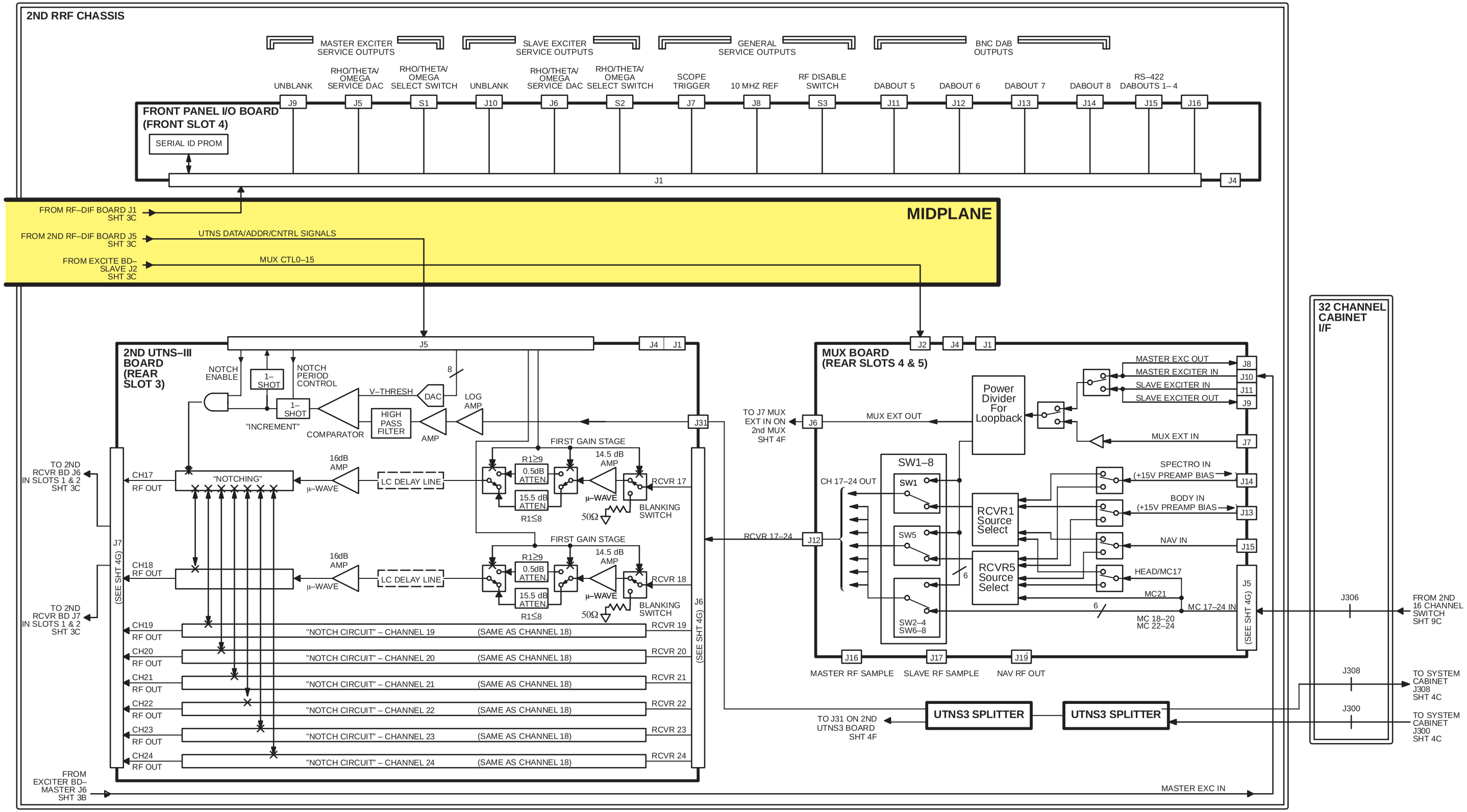

HDx (14.x) & HDxt (1.5.x) MGD/RRF/RF SUBSYSTEM
(Channels 17–24 of 32 Channel – Forward Production & Upgrades)
2nd RRF CHASSIS INTERCONNECT BLOCK DIAGRAM 2c OF 4C (32 Channel)
SHEET 4E OF 16

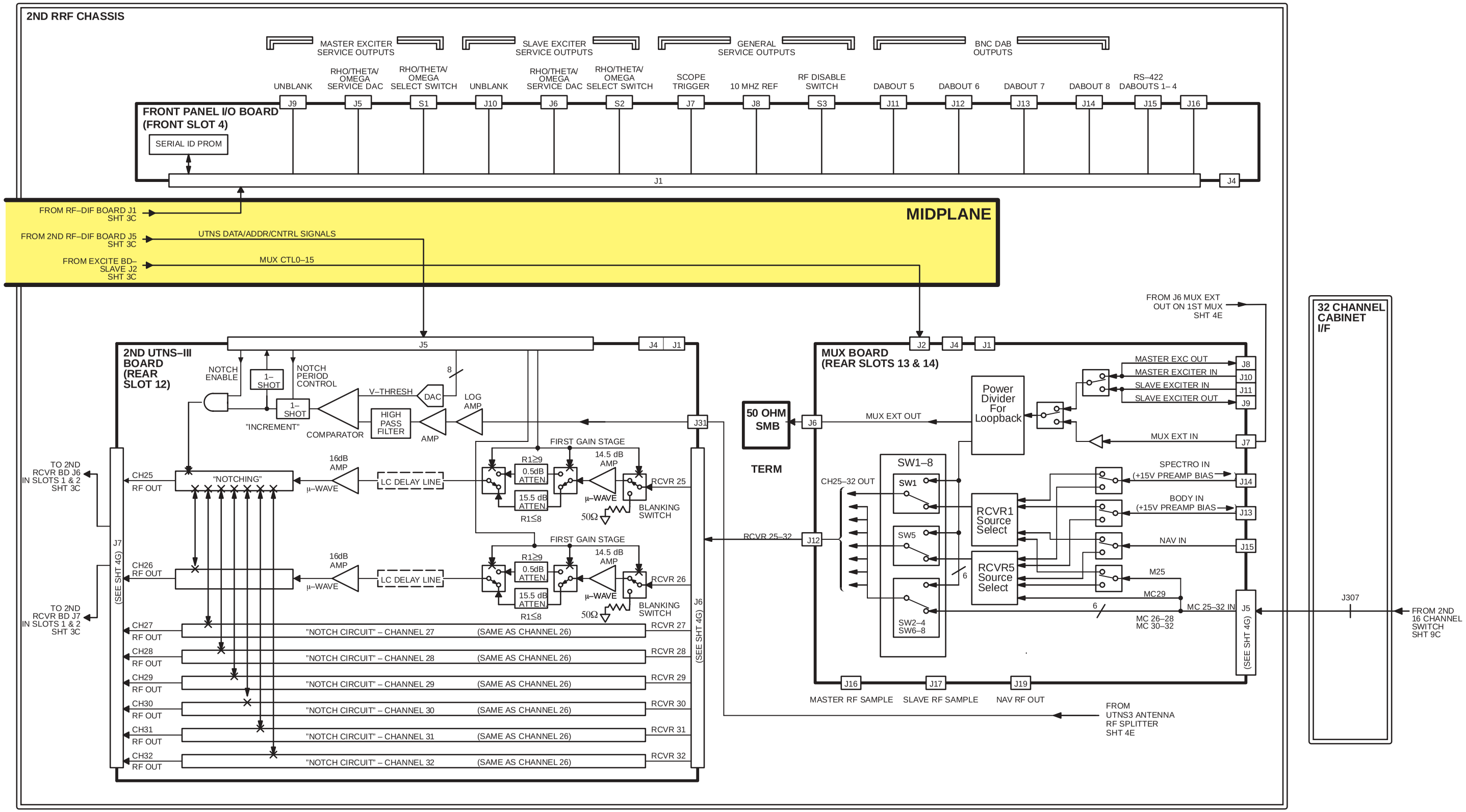

HDx (14.x) & HDxt (1.5.x) MGD/RRF/RF SUBSYSTEM
(Channels 25–32 of 32 Channel – Forward Production & Upgrades)
RRF CHASSIS INTERCONNECT BLOCK DIAGRAM 2d OF 4C (32 Channel)
SHEET 4E OF 16

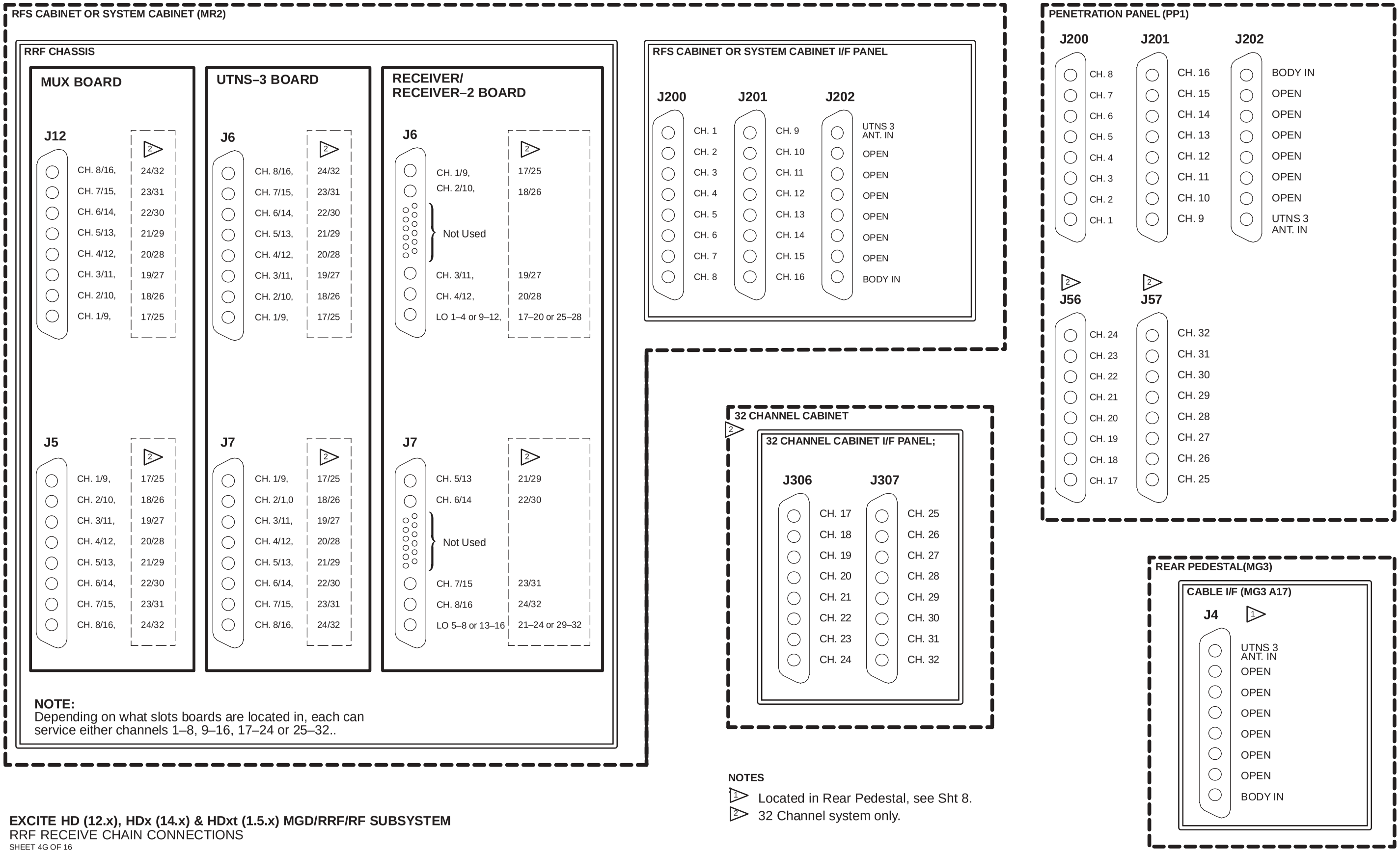

NOTES

1 Located in Rear Pedestal, see Sht 8.

2 32 Channel system only.

EXCITE HD (12.x), HDx (14.x) & HDxt (1.5.x) MGD/RRF/RF SUBSYSTEM
RRF RECEIVE CHAIN CONNECTIONS
SHEET 4G OF 16

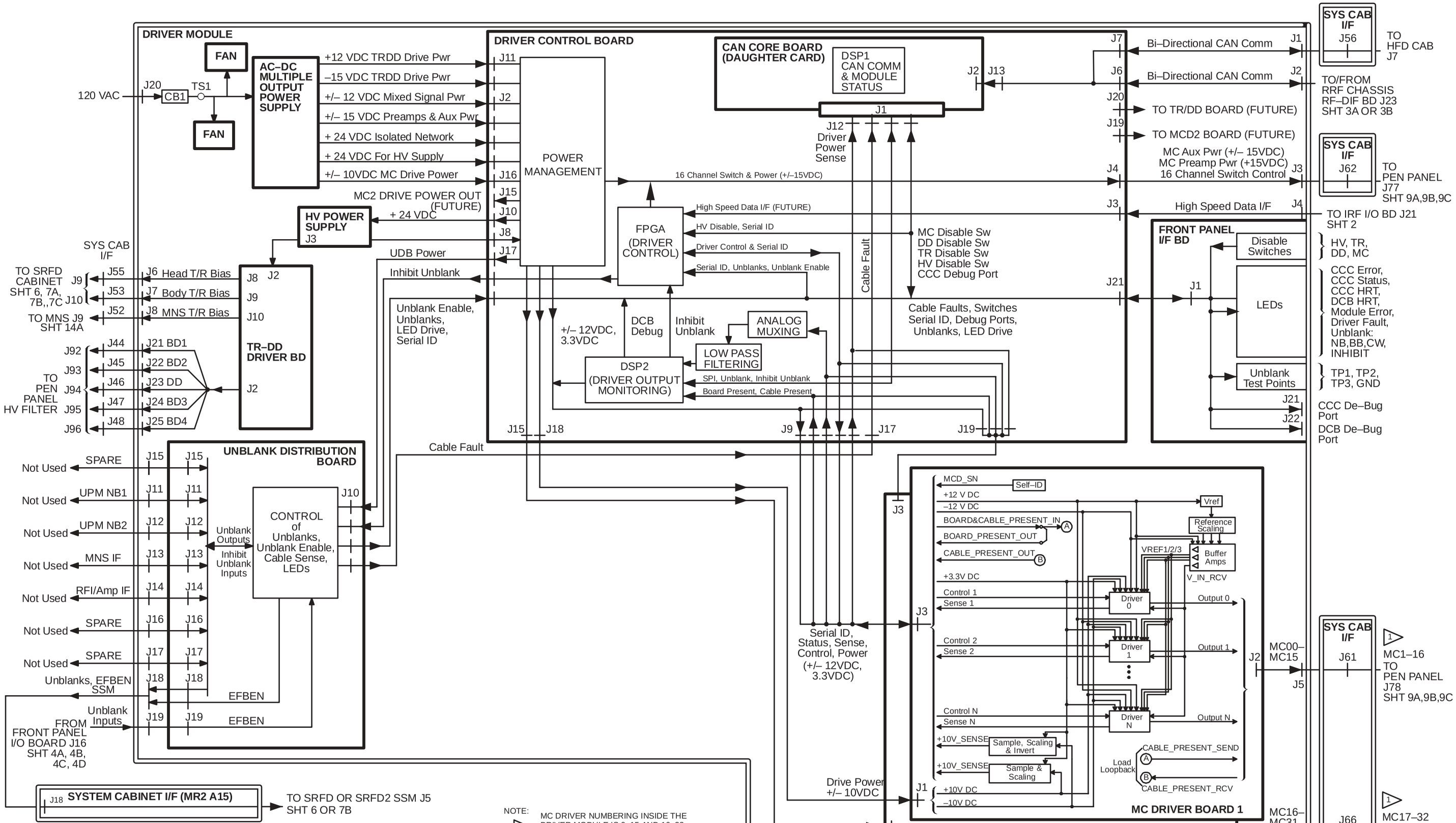

EXCITE HD (12.x) MGD/RRF/RF SUBSYSTEM
DRIVER MODULE (Upgrade with SSM)
SHEET 5A OF 16

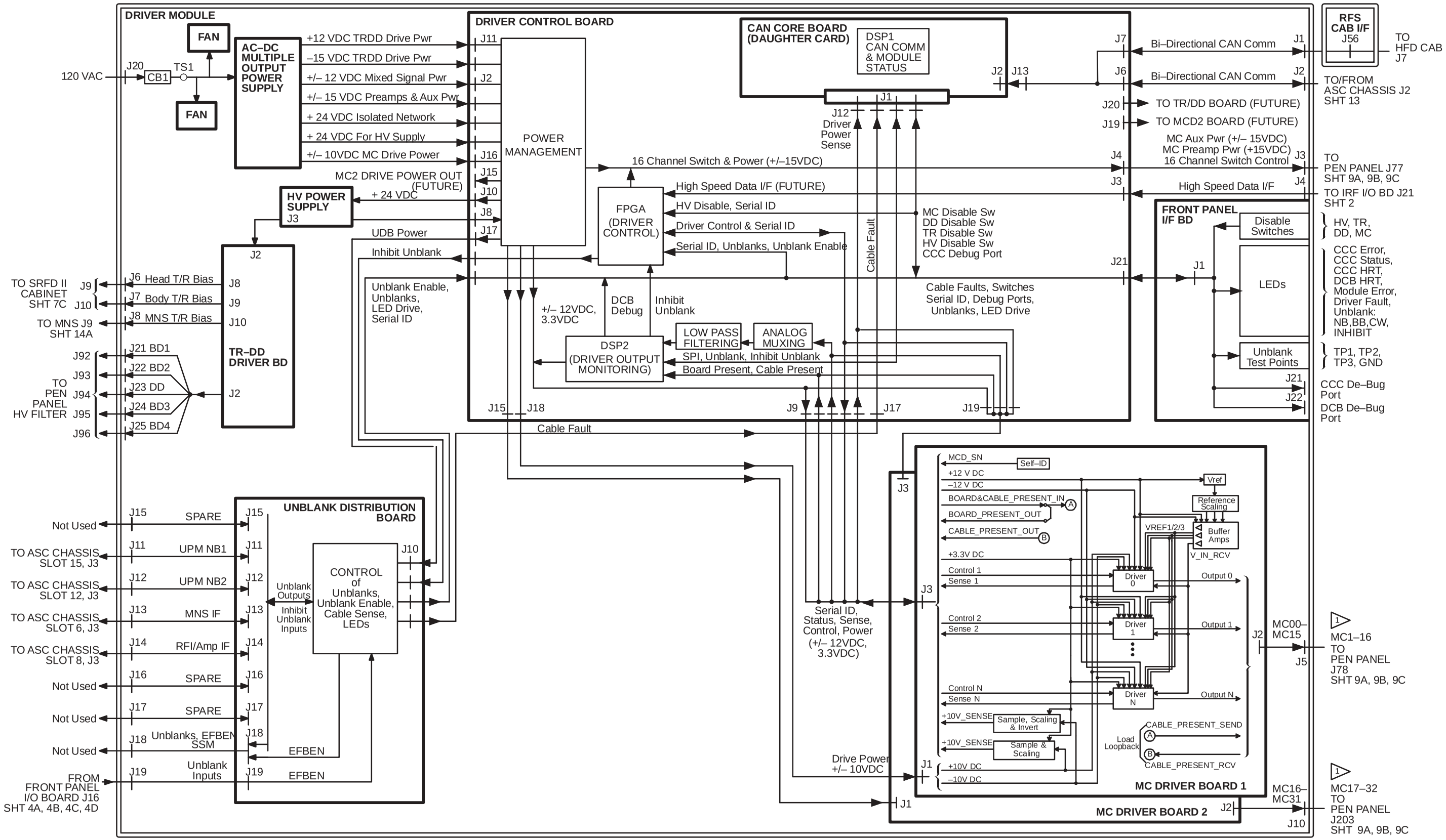

EXCITE HD (12.x) MGD/RRF/RF SUBSYSTEM
DRIVER MODULE (Forward Production, RFS Cabinet, no SSM)
SHEET 5B OF 16

NOTE: 1 MC DRIVER NUMBERING INSIDE THE DRIVER MODULE IS 0–15 AND 16–32.. OUTSIDE NUMBERING IS 1–16 AND 17–32.

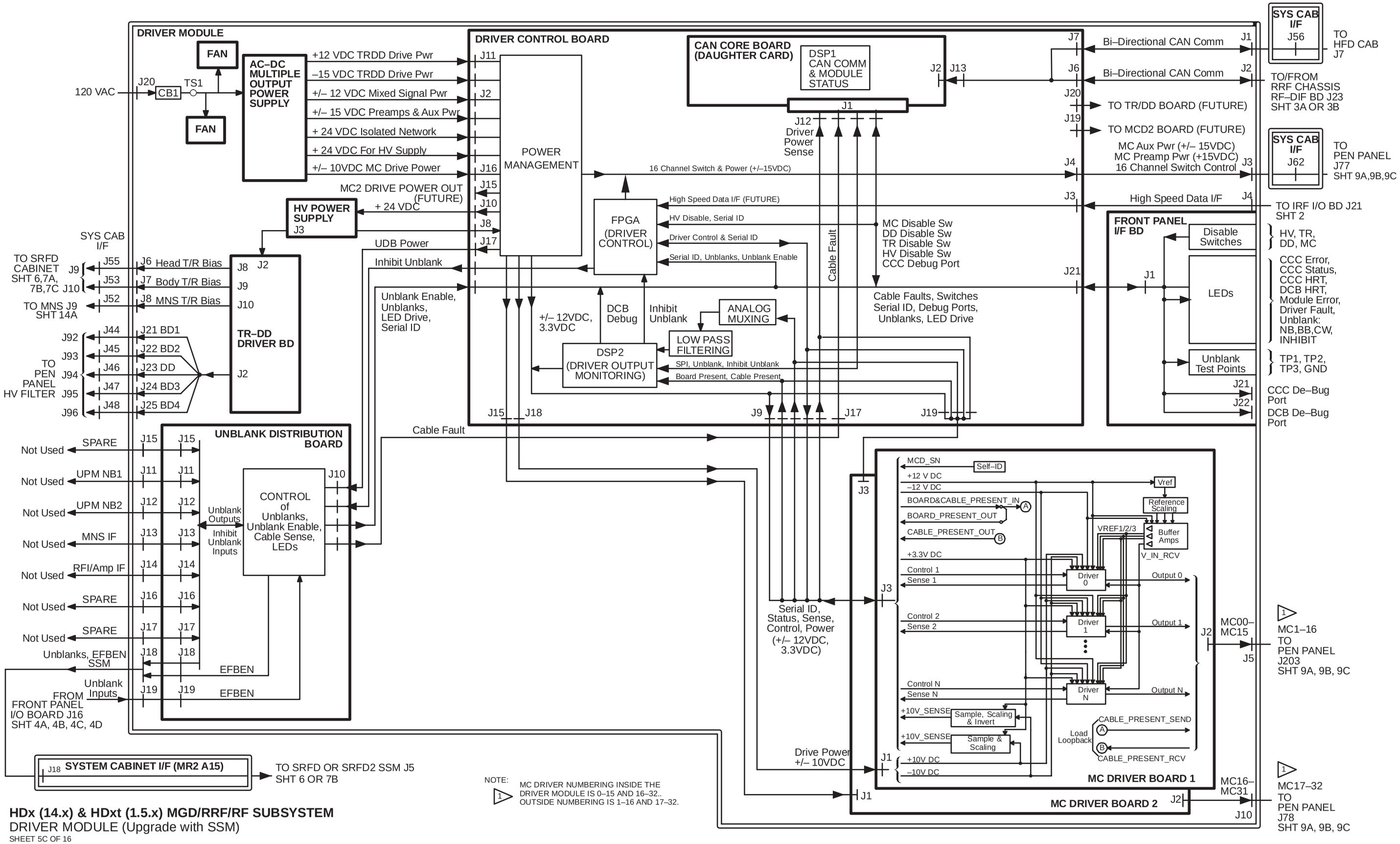

HDx (14.x) & HDxt (1.5.x) MGD/RRF/RF SUBSYSTEM
DRIVER MODULE (Upgrade with SSM)
SHEET 5C OF 16

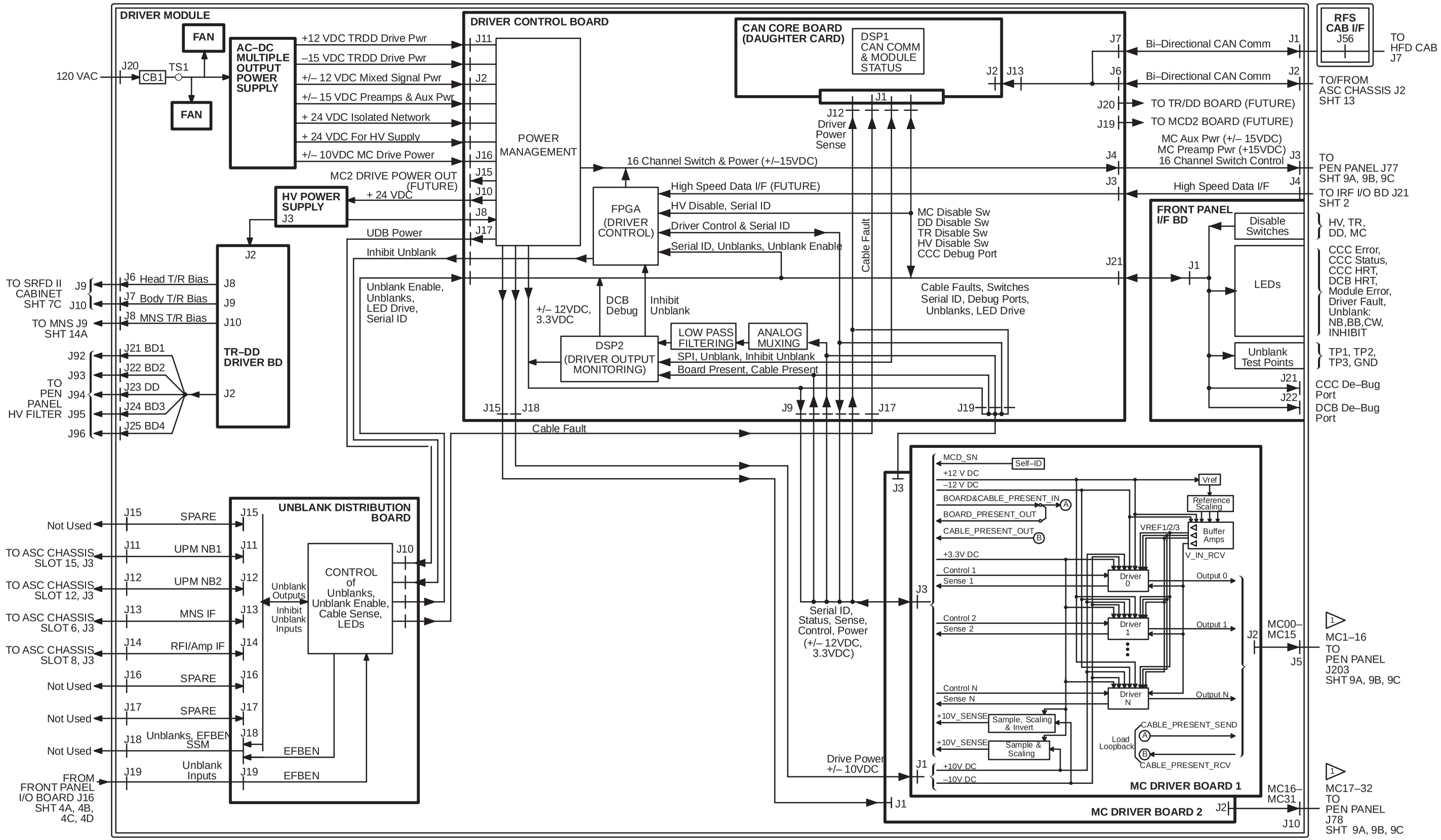

HDx (14.x) & HDxt (1.5.x) MGD/RRF/RF SUBSYSTEM
DRIVER MODULE (Forward Production, RFS Cabinet, no SSM)
SHEET 5D OF 16

NOTE:
1 MC DRIVER NUMBERING INSIDE THE DRIVER MODULE IS 0–15 AND 16–32.. OUTSIDE NUMBERING IS 1–16 AND 17–32.

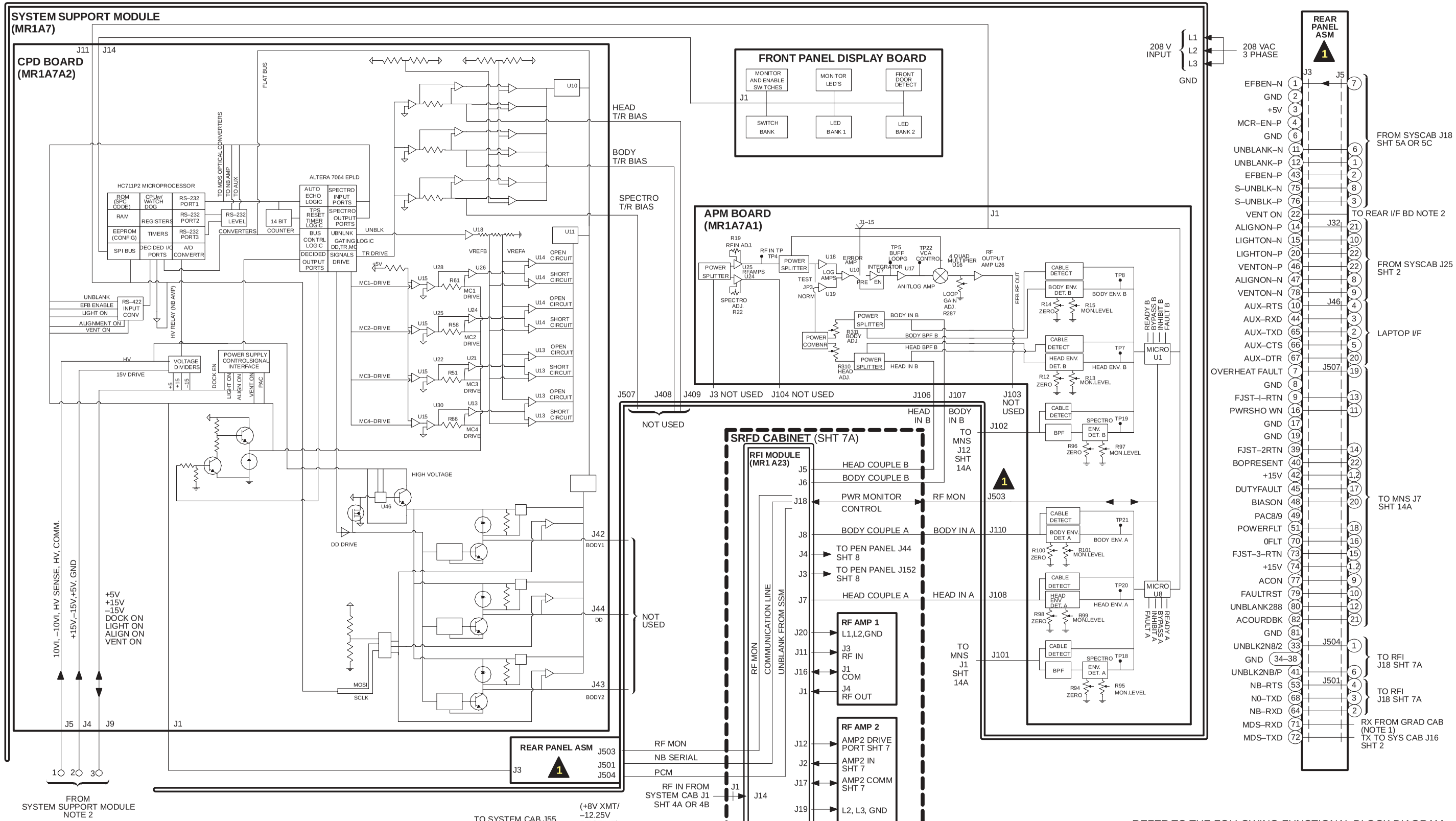

EXCITE HD (12.x), HDx (14.x) & HDxt (1.5.x) MGD/RRF/RF SUBSYSTEM
(Upgrades Only)
SRFD POWER CABINET – SYSTEM SUPPORT MODULE
SHEET 6 OF 16

REFER TO THE FOLLOWING FUNCTIONAL BLOCK DIAGRAM FOR ADDITIONAL INFORMATION:

NOTE:
1) GRADIENT
2) PATIENT HANDLING

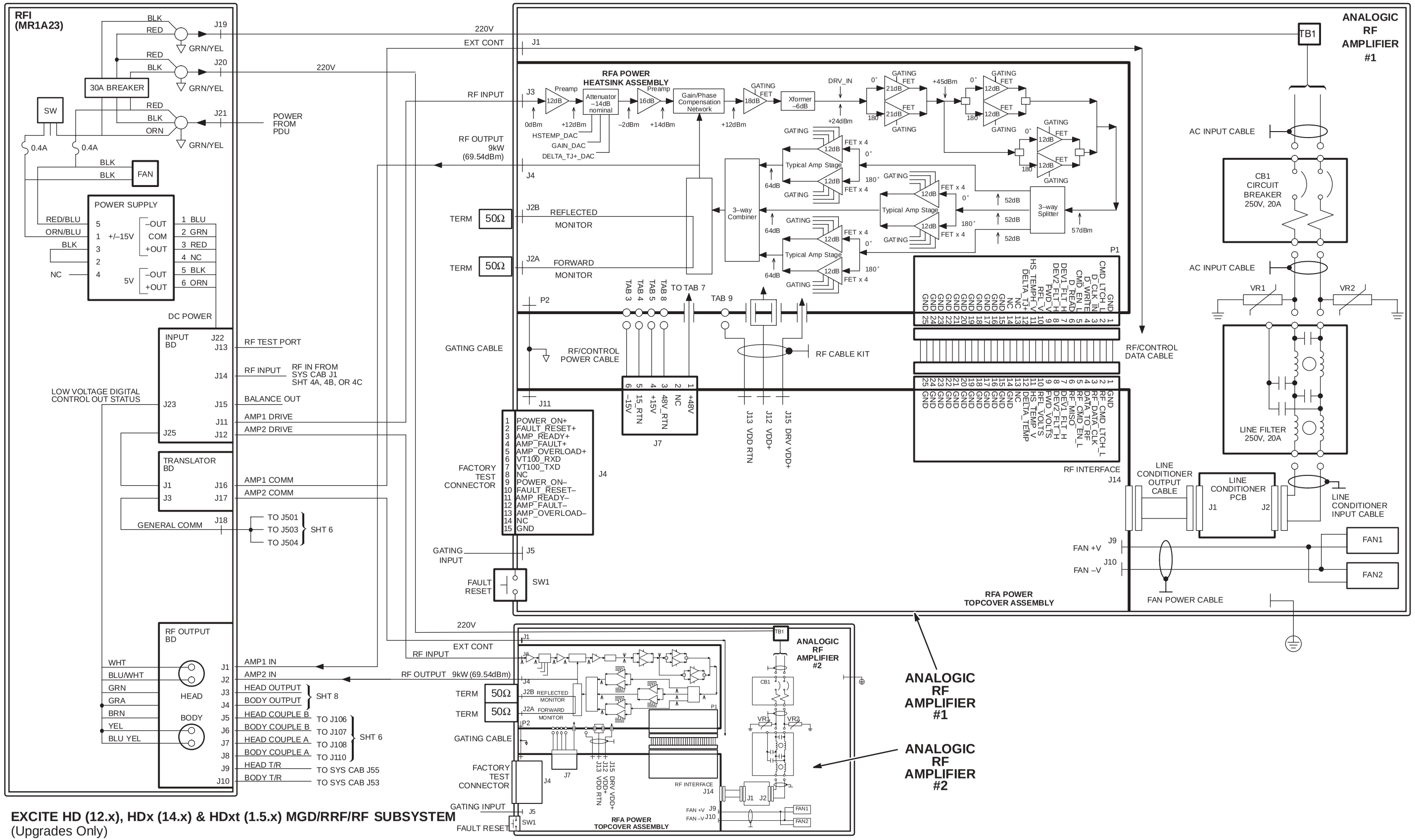

EXCITE HD (12.x), HDx (14.x) & HDxt (1.5.x) MGD/RRF/RF SUBSYSTEM
(Upgrades Only)
SRFD CABINET – RFI AND SOLID STATE AMPS
SHEET 7A OF 16

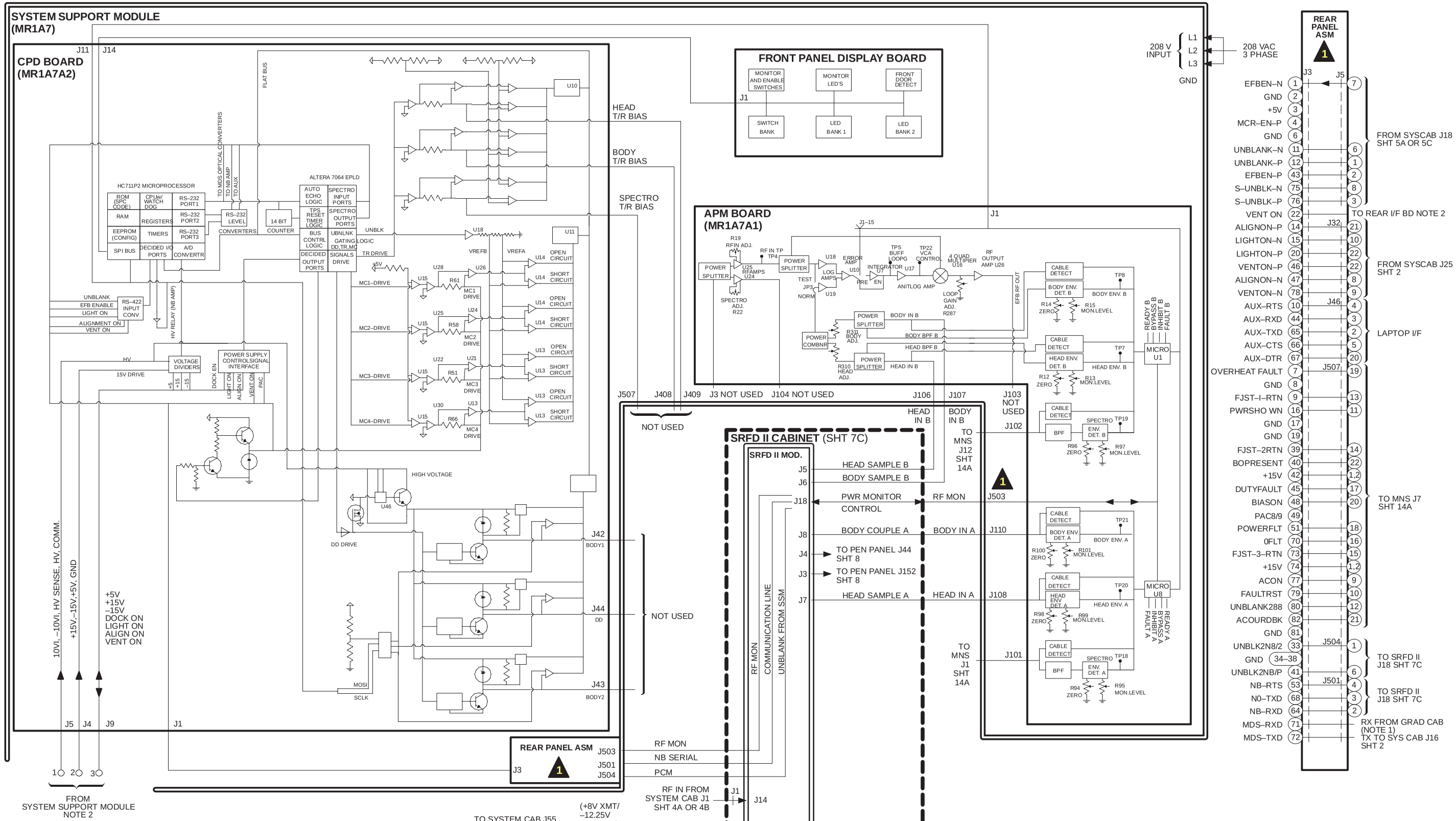

EXCITE HD (12.x), HDx (14.x) & HDxt (1.5.x) MGD/RRF/RF SUBSYSTEM
(Upgrades Only)
SRFD II POWER CABINET – SYSTEM SUPPORT MODULE
SHEET 7B OF 16

REFER TO THE FOLLOWING FUNCTIONAL BLOCK DIAGRAM FOR ADDITIONAL INFORMATION:

NOTE:
1) GRADIENT
2) PATIENT HANDLING

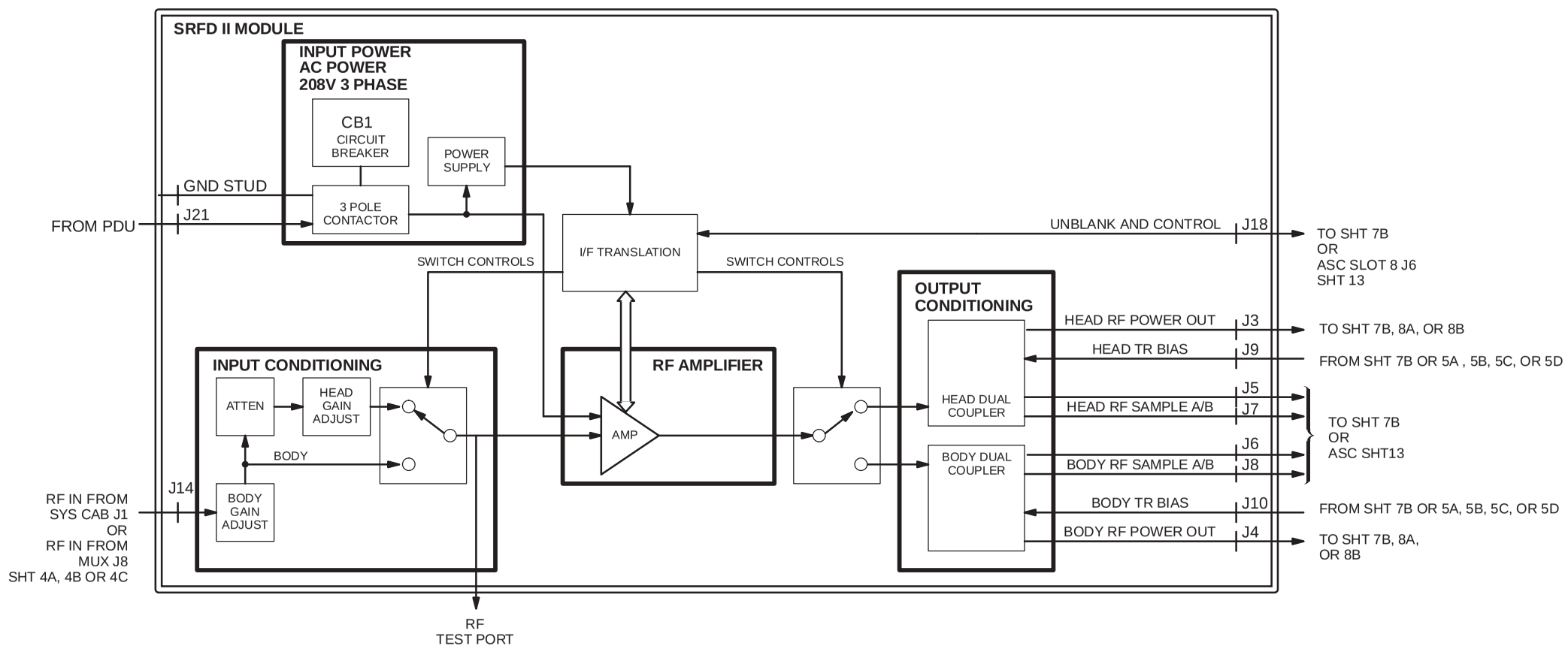

EXCITE HD (12.x), HDx (14.x) & HDxt (1.5.x) MGD/RRF/RF SUBSYSTEM
SRFD II RF AMPLIFIER
SHEET 7C OF 16

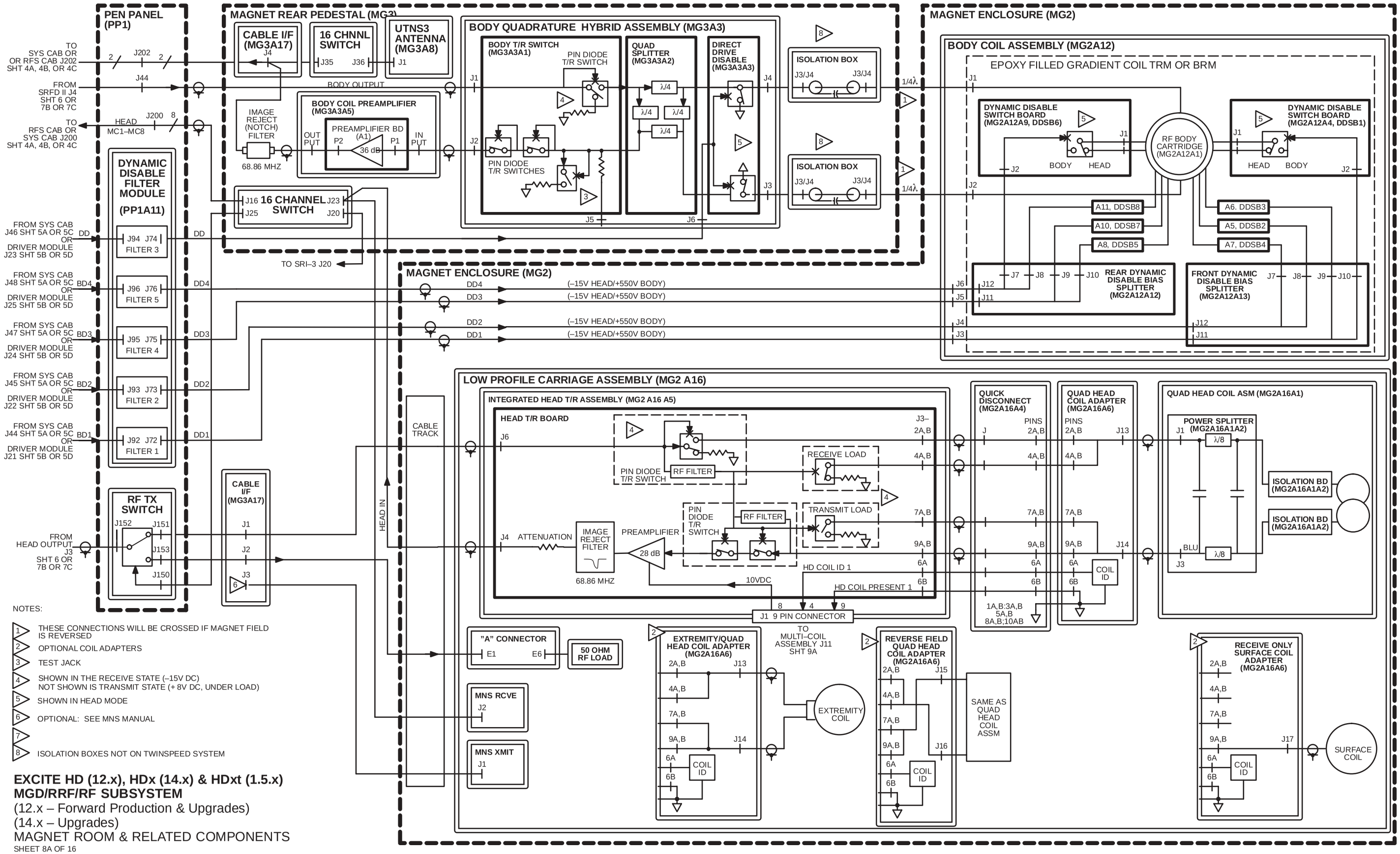

EXCITE HD (12.x), HDx (14.x) & HDxt (1.5.x)
MGD/RRF/RF SUBSYSTEM
(12.x – Forward Production & Upgrades)
(14.x – Upgrades)
MAGNET ROOM & RELATED COMPONENTS
SHEET 8A OF 16

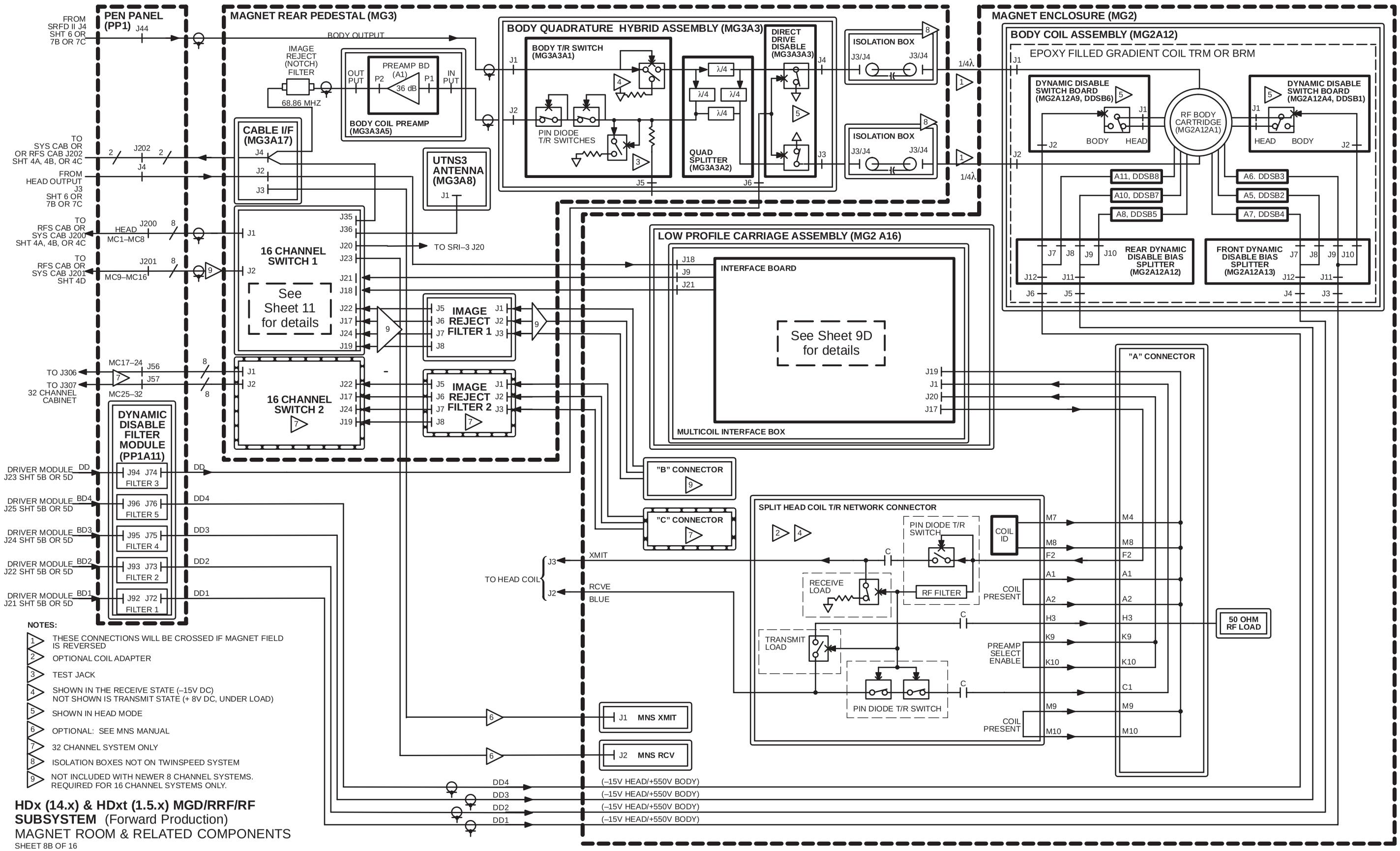

HDx (14.x) & HDxt (1.5.x) MGD/RRF/RF SUBSYSTEM (Forward Production)
MAGNET ROOM & RELATED COMPONENTS
SHEET 8B OF 16

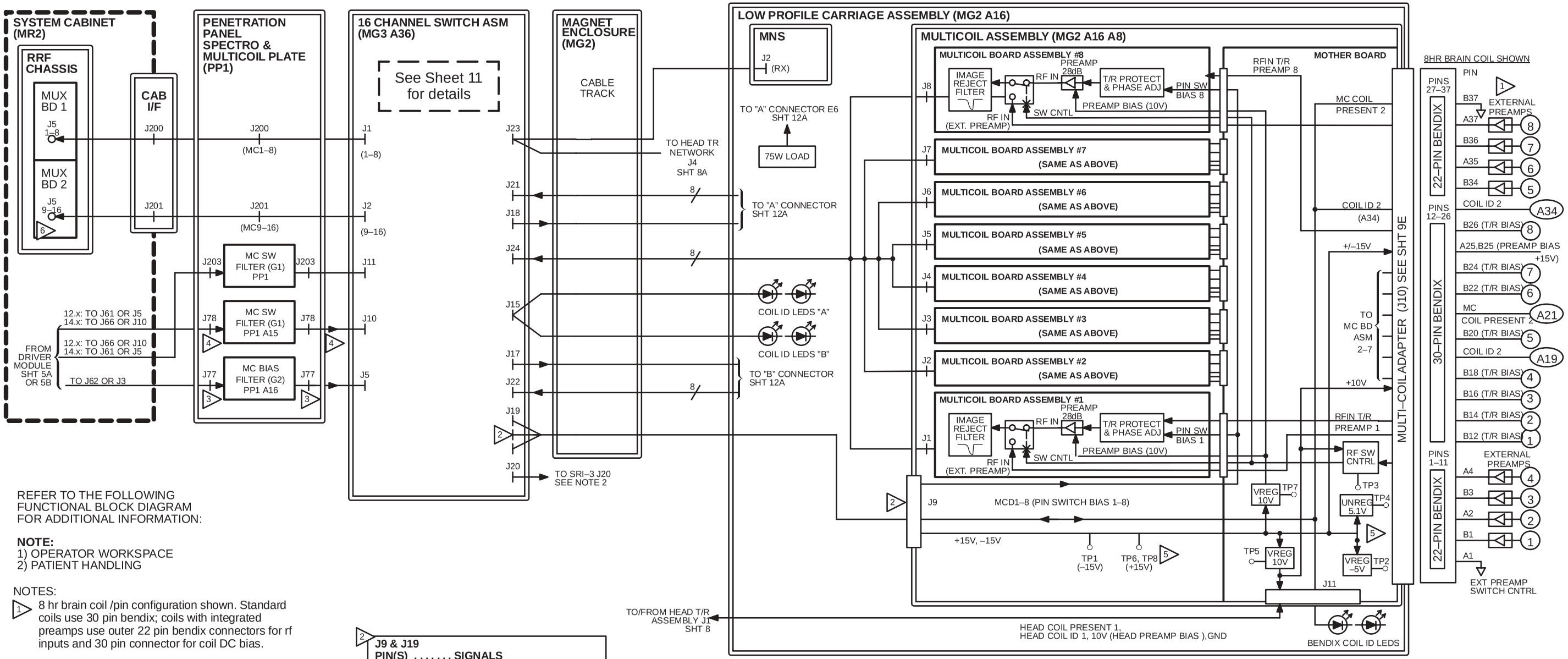

REFER TO THE FOLLOWING FUNCTIONAL BLOCK DIAGRAM FOR ADDITIONAL INFORMATION:

NOTE:
1) OPERATOR WORKSPACE
2) PATIENT HANDLING

NOTES:

1. 8 hr brain coil /pin configuration shown. Standard coils use 30 pin bendix; coils with integrated preamps use outer 22 pin bendix connectors for rf inputs and 30 pin connector for coil DC bias.

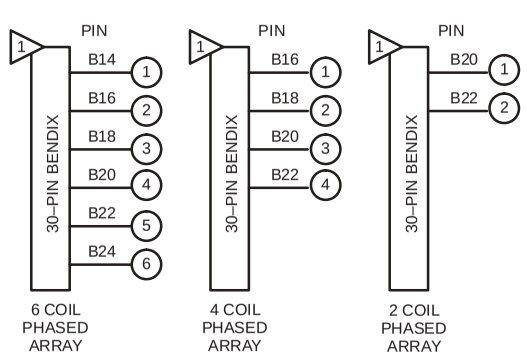

EXCITE HD (12.x) or HDx (14.x Upgrade)
MGD/RRF/RF SUBSYSTEM
MULTI–COIL MODULES
SHEET 9A OF 16

2. **J9 & J19**

PIN(S)	SIGNALS
1,14	–15V
2,15	+15V
3, 4, 23–25	GND
5	MCD8
6	MCD4
7	MCD7
8	MCD3
9	MCD6
10	MCD2
11	MCD5
12	MCD1
13	CTL_PREAMP (NOTE 1)
16	RED_LED
17	YEL_LED
18	GRN_LED
19	COIL PRESENT #1
20	COIL PRESENT #2
21	COIL ID #1
22	COIL ID #2

NOTE 1: PIN 13 DEFAULT LOW. LOW: PREAMP POWER ON. HIGH: PREAMP POWER OFF.

3. **MC PREAMP BIAS FILTER PINOUTS**
J62 OR J3 & J77

PIN	SIGNAL NAME
1	XPT_DATA_POS
2	XPT_STROBE_POS
3	XPT_OE_N_POS
4	AGND
5	AGND
6	+15V (NOTE 1)
7	+15V (NOTE 1)
8	+15V (NOTE 1)
9	XPT_DATA_NEG
10	XPT_STROBE_NEG
11	XPT_OE_N_NEG
12	AGND
13	AGND
14	–15V (MC COILS)
15	–15V (MC COILS)

NOTE 1: ANALOG POWER FOR PREAMPS (MC & HEAD), CROSSPOINT & MC COILS.

4. **J10 & J78**

PIN(S)	SIGNAL
1–8	MCD1–8 (NOTE 1)
9	MC CABLE PRESENT_O IN (NOTE 2)
10,11	NO CONNECT
12–19	MCD9–16 (NOTE 3)
20–27	GND
29	MC CABLE PRESENT_1 IN (NOTE 2)
30–37	GND

NOTE 1: MULTICOIL BIAS (+3V,+5V,+7V,–5V).
NOTE 2: THESE TWO PINS CONNECTED TOGETHER ON J10 FOR DIAGNOSTIC LOOPBACK.
NOTE 3: NOT USED/CONNECTED AT J10 INSIDE CROSSPOINT SWITCH ASSEMBLY.

5. **LOCATED BEHIND MULTICOIL BD ASSY**

TEST POINT	FUNCTION
7 TP1	–15V
6 TP2	–5V
6 TP3	RF SW CNTRL SIG
2, 3 TP4	5.1V
1, 2 TP5	+10V_B
1, 2 TP6	+15V
7, 8 TP7	+10V_A
7, 8 TP8	+15V

6. Only 16 Channel Systems have a second MUX board. J201 not used in 8 and 4 Channel systems.

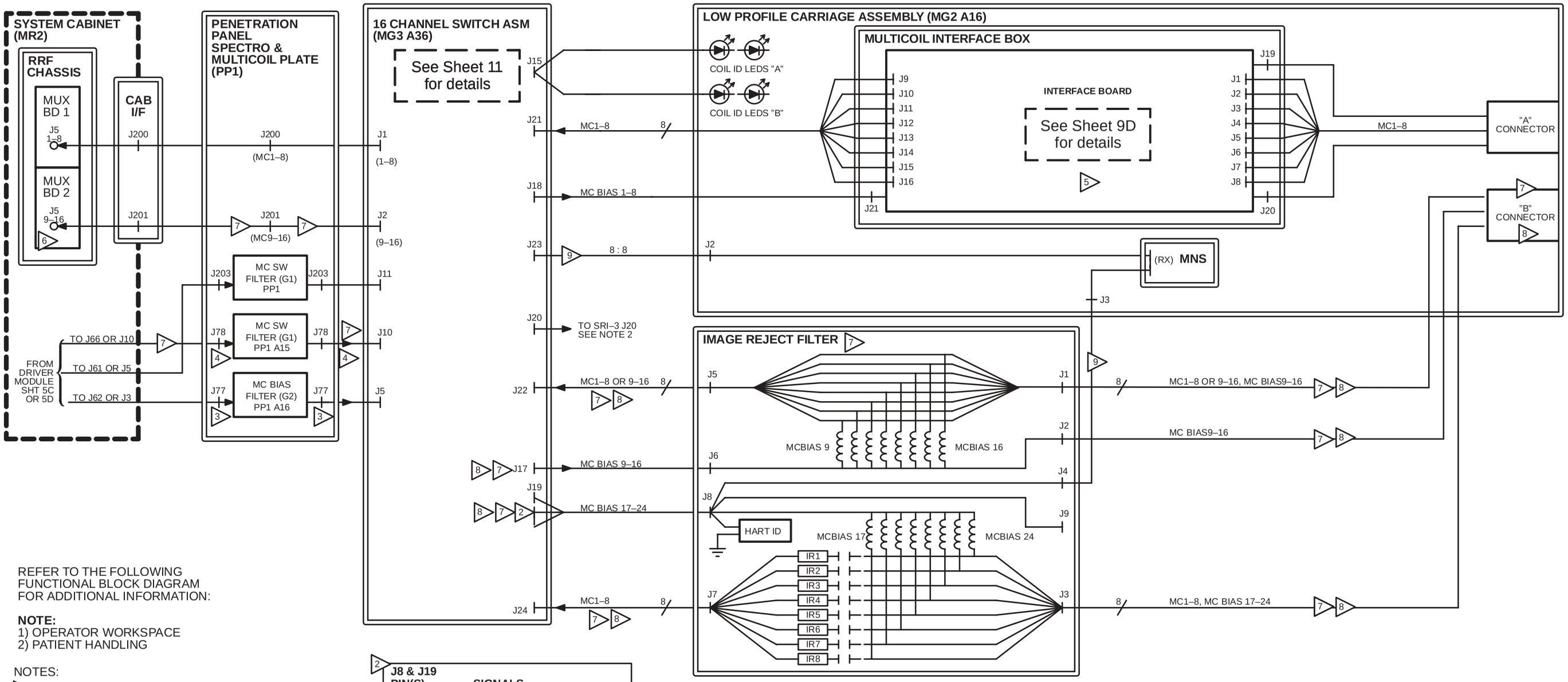

REFER TO THE FOLLOWING FUNCTIONAL BLOCK DIAGRAM FOR ADDITIONAL INFORMATION:

NOTE:
1) OPERATOR WORKSPACE
2) PATIENT HANDLING

NOTES:

1

2 **J8 & J19**

PIN(S)	SIGNALS
1,14	–15V
2,15	+15V
3, 4, 23–25	GND
5	MCD8
6	MCD4
7	MCD7
8	MCD3
9	MCD6
10	MCD2
11	MCD5
12	MCD1
13	CTL_PREAMP (NOTE 1)
16	RED_LED
17	YEL_LED
18	GRN_LED
19	COIL PRESENT #1
20	COIL PRESENT #2
21	COIL ID #1
22	COIL ID #2

NOTE 1: PIN 13 DEFAULT LOW.
LOW: PREAMP POWER ON.
HIGH: PREAMP POWER OFF.

MC PREAMP BIAS FILTER PINOUTS

3 **J62 OR J3 & J77**

PIN	SIGNAL NAME
1	XPT_DATA_POS
2	XPT_STROBE_POS
3	XPT_OE_N_POS
4	AGND
5	AGND
6	+15V (NOTE 1)
7	+15V (NOTE 1)
8	+15V (NOTE 1)
9	XPT_DATA_NEG
10	XPT_STROBE_NEG
11	XPT_OE_N_NEG
12	AGND
13	AGND
14	–15V (MC COILS)
15	–15V (MC COILS)

NOTE 1: ANALOG POWER FOR PREAMPS (MC & HEAD), CROSSPOINT & MC COILS.

4 **J10 & J66**

PIN(S)	SIGNAL
1–8	MCD1–8 (NOTE 1)
9	MC CABLE PRESENT_O IN (NOTE 2)
10,11	NO CONNECT
12–19	MCD9–16 (NOTE 3)
20–27	GND
29	MC CABLE PRESENT_1 IN (NOTE 2)
30–37	GND

NOTE 1: MULTICOIL BIAS (+3V,+5V,+7V,–5V).
NOTE 2: THESE TWO PINS CONNECTED TOGETHER ON J10 FOR DIAGNOSTIC LOOPBACK.
NOTE 3: NOT USED/CONNECTED AT J10 INSIDE CROSSPOINT SWITCH ASSEMBLY.

5

TESTPOINT	FUNCTION
TP1	SYSTEM PREAMP ENABLE (+15V OR 0V)
TP2	PREAMP SELECT 1
TP3	PREAMP SELECT 2
TP4	8.5V_A
TP5	+10V_B CNTRL
TP6	+15V
TP7	+5.1V
TP8	+15V
TP9	+15V
TP10	8.5V_B
TP11	8.5V_C
TP12	–15V
TP13	–8.5V

6 Only 16 Channel Systems have a second MUX board.

7 Required on 16 or 32 Channel systems.

8 B Connector and MC Bias lines are not included in newer 8 Channel systems.

9 Optional: See MNS manual

HDx (14.x) & HDxt (1.5.x) MGD/RRF/RF SUBSYSTEM
8 and 16 CHANNEL MULTI–COIL
SHEET 9B OF 16

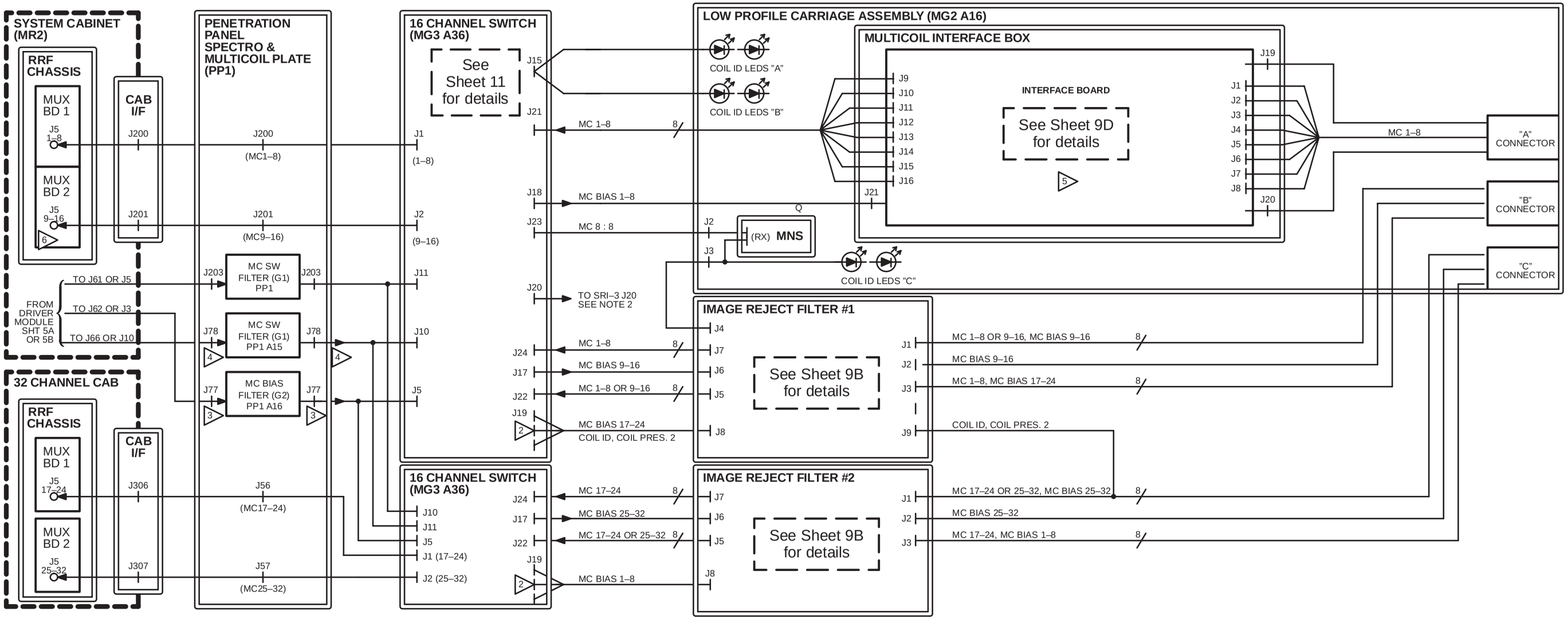

REFER TO THE FOLLOWING FUNCTIONAL BLOCK DIAGRAM FOR ADDITIONAL INFORMATION:

NOTE:
1) OPERATOR WORKSPACE
2) PATIENT HANDLING

NOTES:

1

2

J8 & J19

PIN(S)	SIGNALS
1,14	–15V
2,15	+15V
3, 4, 23–25	GND
5	MCD8
6	MCD4
7	MCD7
8	MCD3
9	MCD6
10	MCD2
11	MCD5
12	MCD1
13	CTL_PREAMP (NOTE 1)
16	RED_LED
17	YEL_LED
18	GRN_LED
19	COIL PRESENT #1
20	COIL PRESENT #2
21	COIL ID #1
22	COIL ID #2

NOTE 1: PIN 13 DEFAULT LOW. LOW: PREAMP POWER ON. HIGH: PREAMP POWER OFF.

MC PREAMP BIAS FILTER PINOUTS

3

J62 OR J3 & J77

PIN	SIGNAL NAME
1	XPT_DATA_POS
2	XPT_STROBE_POS
3	XPT_OE_N_POS
4	AGND
5	AGND
6	+15V (NOTE 1)
7	+15V (NOTE 1)
8	+15V (NOTE 1)
9	XPT_DATA_NEG
10	XPT_STROBE_NEG
11	XPT_OE_N_NEG
12	AGND
13	AGND
14	–15V (MC COILS)
15	–15V (MC COILS)

NOTE 1: ANALOG POWER FOR PREAMPS (MC & HEAD), CROSSPOINT & MC COILS.

4

J10 & J66

PIN(S)	SIGNAL
1–8	MCD1–8 (NOTE 1)
9	MC CABLE PRESENT_O IN (NOTE 2)
10,11	NO CONNECT
12–19	MCD9–16 (NOTE 3)
20–27	GND
29	MC CABLE PRESENT_1 IN (NOTE 2)
30–37	GND

NOTE 1: MULTICOIL BIAS (+3V,+5V,+7V,–5V).
NOTE 2: THESE TWO PINS CONNECTED TOGETHER ON J10 FOR DIAGNOSTIC LOOPBACK.
NOTE 3: NOT USED/CONNECTED AT J10 INSIDE CROSSPOINT SWITCH ASSEMBLY.

5

TESTPOINT	FUNCTION
TP1	SYSTEM PREAMP ENABLE (+15V OR 0V)
TP2	PREAMP SELECT 1
TP3	PREAMP SELECT 2
TP4	8.5V_A
TP5	+10V_B CNTRL
TP6	+15V
TP7	+5.1V
TP8	+15V
TP9	+15V
TP10	8.5V_B
TP11	8.5V_C
TP12	–15V
TP13	–8.5V

6 Only 16 Channel Systems have a second MUX board. J201 not used in 8 and 4 Channel systems.

HDx (14.x) & HDxt (1.5.x) MGD/RRF/RF SUBSYSTEM
32 CHANNEL MULTI–COIL
SHEET 9C OF 16

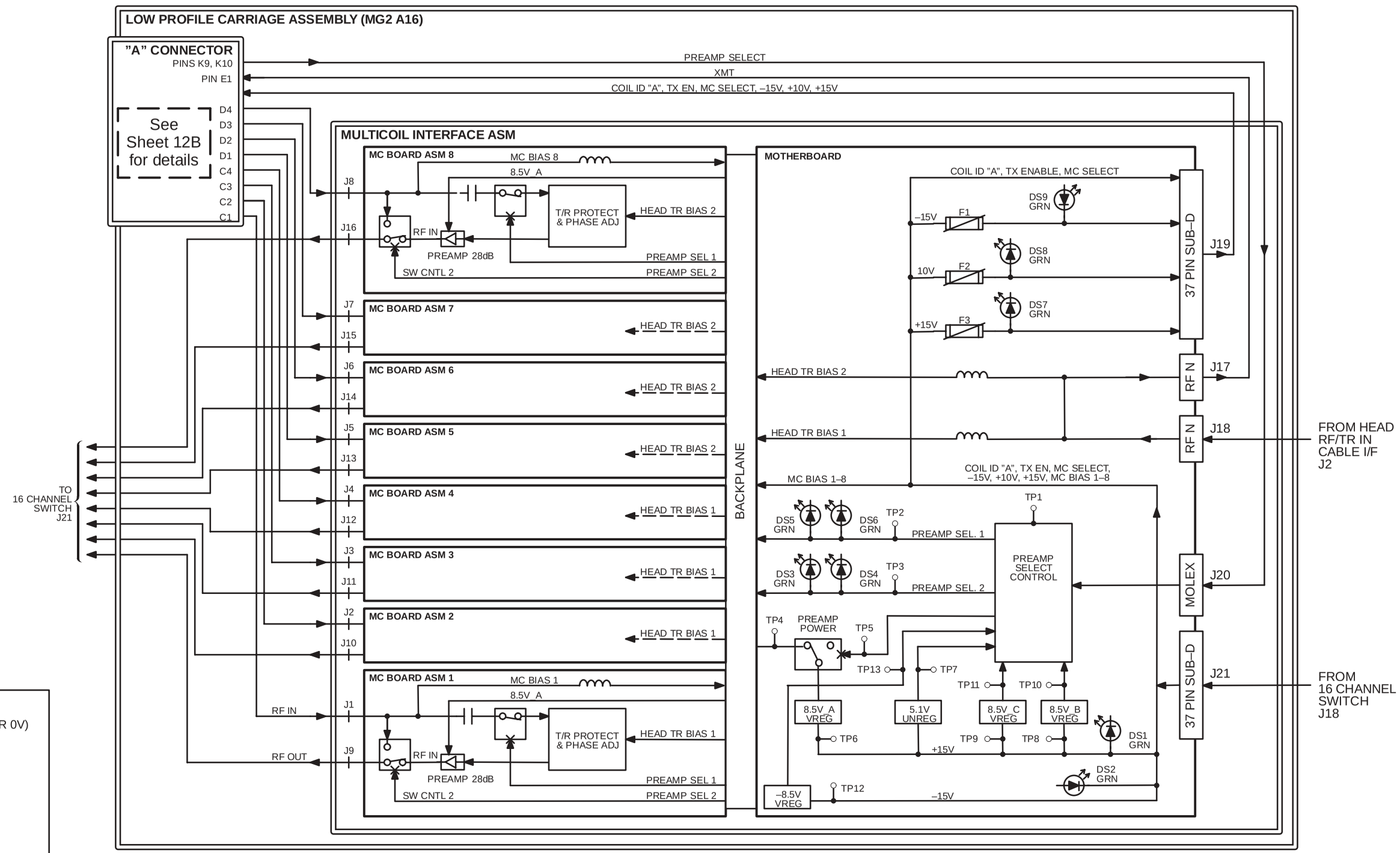

TESTPOINT	FUNCTION
TP1	SYSTEM PREAMP ENABLE (+15V OR 0V)
TP2	PREAMP SELECT 1
TP3	PREAMP SELECT 2
TP4	8.5V_A
TP5	+10V_B CNTRL
TP6	+15V
TP7	+5.1V
TP8	+15V
TP9	+15V
TP10	8.5V_B
TP11	8.5V_C
TP12	–15V
TP13	–8.5V

HDx (14.x) & HDxt (1.5.x) MGD/RRF/RF SUBSYSTEM
LPCA MULTI–COIL INTERFACE ASM
SHEET 9D OF 16

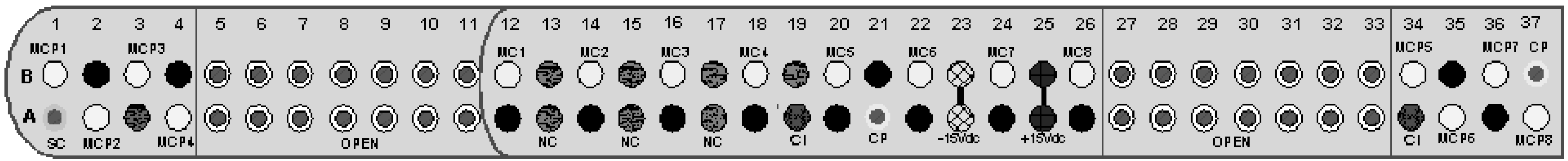

MCP - integrated preamp phase array signal (1 to 8)

MC - legacy phase array signal & multicoil bias (1 to 8) OR (17–24)

Gnd

SC- Integrated Preamp Switch Control

+15 Vdc preamp or auxiliary supply voltage

NC- no connection

-15 Vdc preamp or auxiliary supply voltage

10 Vdc preamp or auxiliary supply voltage

OPEN - no contact pin

CP- coil present for Coil ID

CI - Coil ID

NOTES:

1 MC BIAS is 17–24 on 14.x systems.

EXCITE HD (12.x) & HDx (14.x) MGD/RRF/RF SUBSYSTEM
MULTI–COIL ADAPTER (J10)
SHEET 9E OF 16

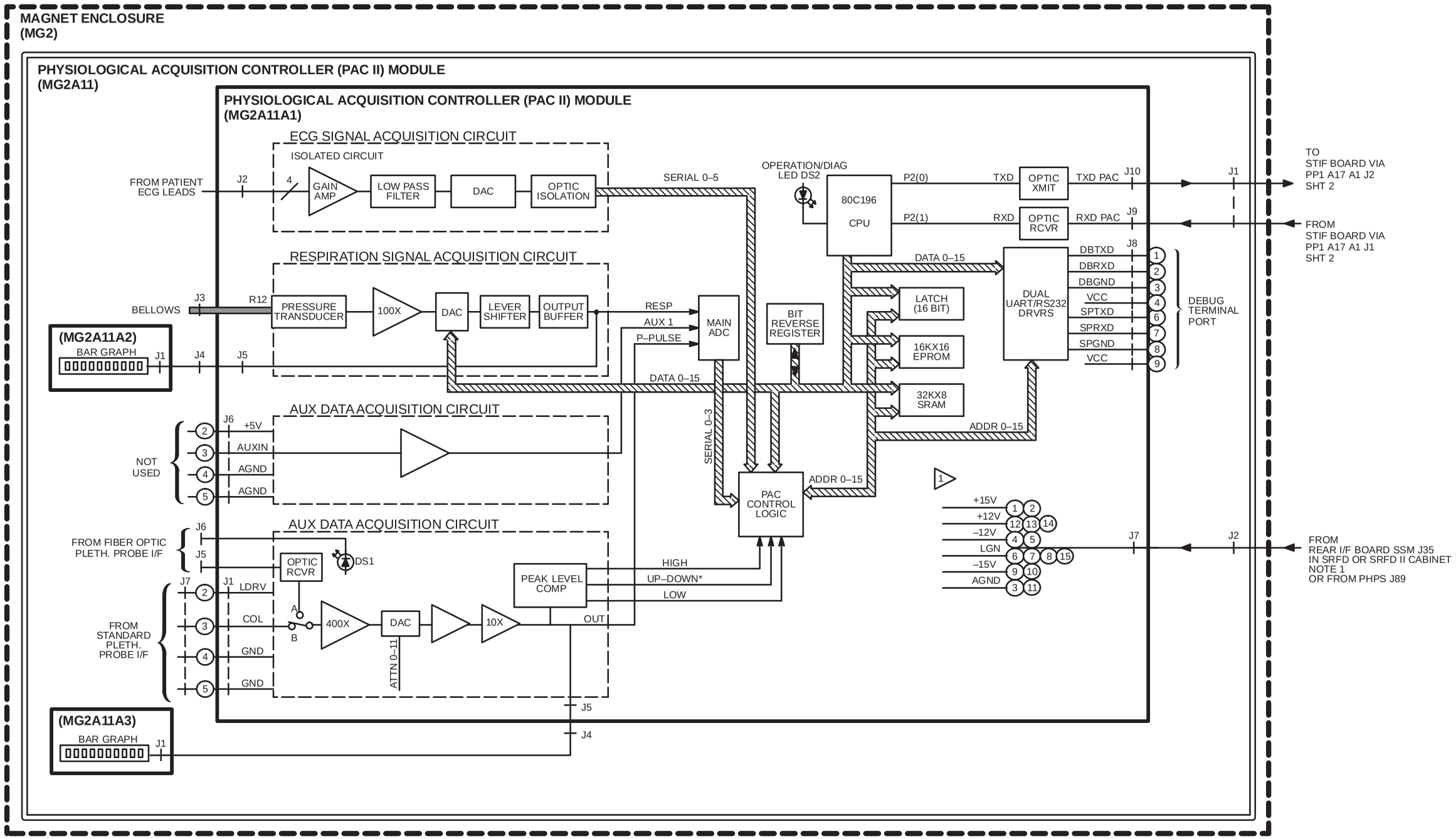

NOTES:

1 MULTIPLE WIRES/PINS WITH SAME SIGNAL ARE NOT SHOWN

REFER TO THE FOLLOWING FUNCTIONAL BLOCK DIAGRAM FOR ADDITIONAL INFORMATION:

NOTE:
1) PATIENT HANDLING

EXCITE HD (12.x), HDx (14.x) & HDxt (1.5.x) MGD/RRF/RF SUBSYSTEM
PHYSIOLOGICAL ACQUISITION CONTROLLER II
SHEET 10 OF 16

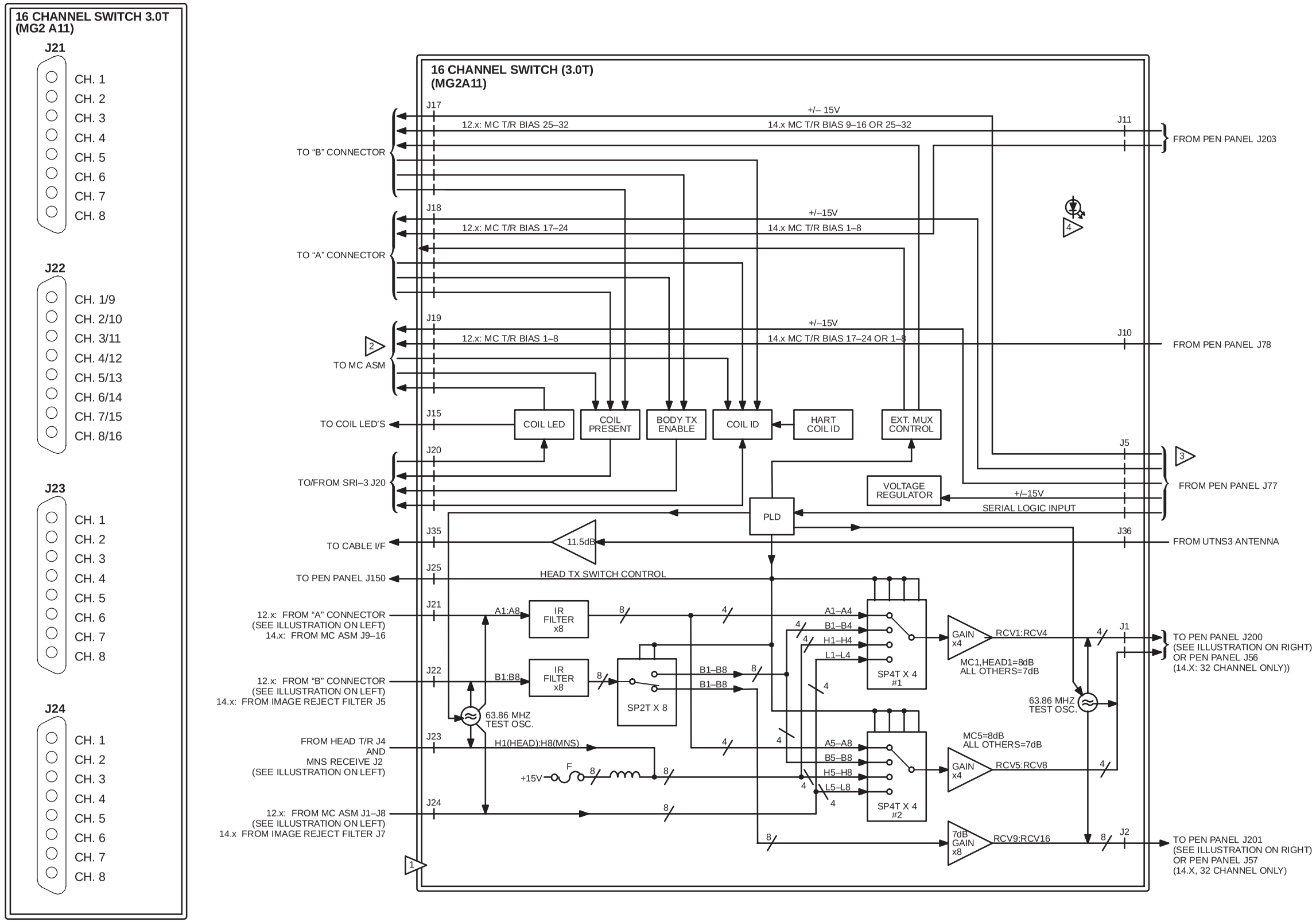

NOTES:

1. Switch positions shown in 16 Channel Receive mode.
2. More connector pinouts present on sheet 9A.
3. **J5 PINS . SIGNALS**

1	XPT_DATA_POS
2	XPT_STROBE_POS
3	XPT_OE_POS
4, 5	OPEN
6, 7, 8	+15V
9, 10	OPEN
11, 12	GND
13	OPEN
14	XPT_DATA_N
15	XPT_STROBE_N
16	XPT_OE_N_N
17, 18	OPEN
19, 20, 21	GND
22, 23	OPEN
24, 25	–15V

4. LED's
   - COIL ID A GREEN
   - COIL ID A RED
   - COIL ID B GREEN
   - COIL ID B RED
   - COIL ID LEGACY GREEN
   - COIL ID LEGACY RED
   - COIL PRESENT A
   - COIL PRESENT B
   - COIL PRESENT 1
   - COIL PRESENT 2
   - TX ENABLE A
   - TX ENABLE B
   - DIAG OUT
   - DIAG IN
   - –15V POWER
   - +15V POWER
   - +24V POWER
   - J21 ON CH. 1–4
   - J22 ON CH. 1–4
   - J23 ON CH. 1–4
   - J24 ON CH. 1–4
   - J21 ON CH. 5–8
   - J22 ON CH. 5–8
   - J23 ON CH. 5–8
   - J24 ON CH. 5–8
   - J22 ON CH. 9–12
   - J22 ON CH. 13–16

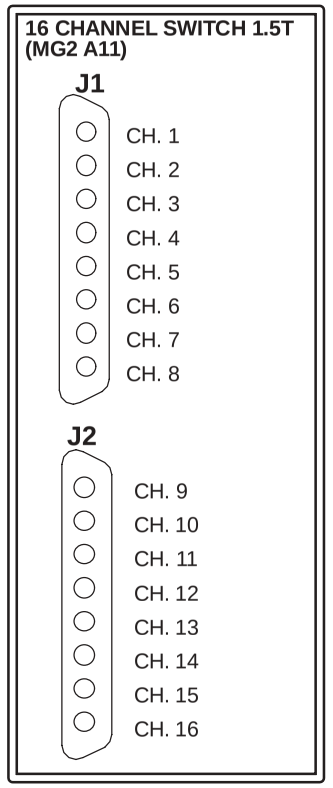

EXCITE HD (12.x), HDx (14.x) & HDxt (1.5.x) MGD/RRF/RF SUBSYSTEM
16 CHANNEL SWITCH (1.5T)
SHEET 11A OF 16

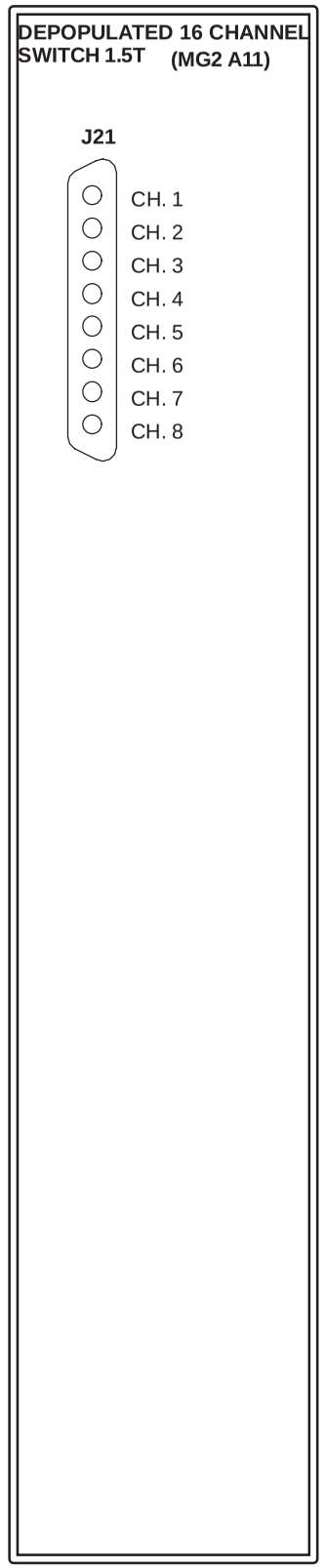

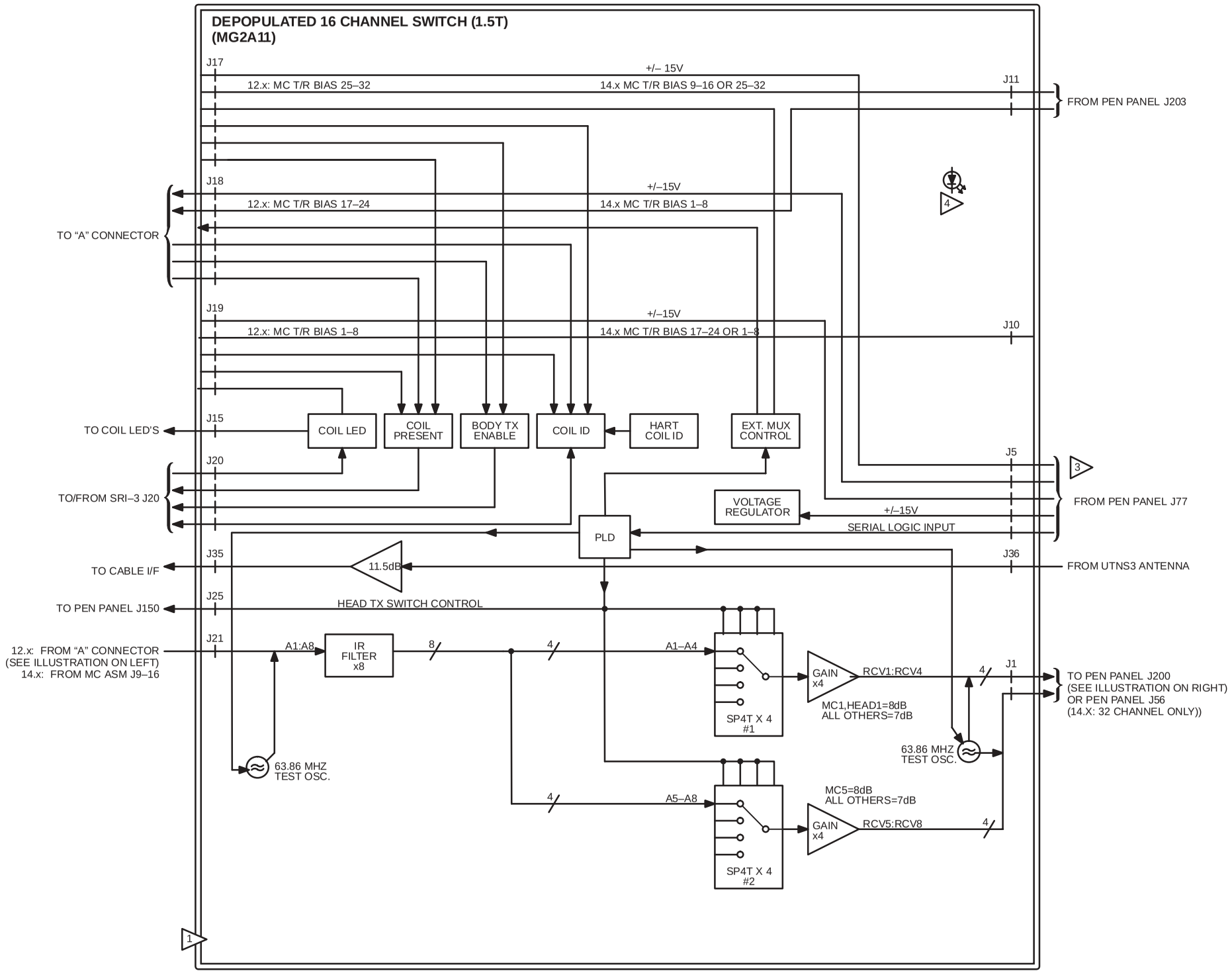

NOTES:

1. Switch positions shown in 8 Channel Receive mode.
2. More connector pinouts present on sheet 9A.
3. **J5 PINS . SIGNALS**

1	XPT_DATA_POS
2	XPT_STROBE_POS
3	XPT_OE_POS
4, 5	OPEN
6, 7, 8	+15V
9, 10	OPEN
11, 12	GND
13	OPEN
14	XPT_DATA_N
15	XPT_STROBE_N
16	XPT_OE_N_N
17, 18	OPEN
19, 20, 21	GND
22, 23	OPEN
24, 25	–15V

4. LED's
   - COIL ID A GREEN
   - COIL ID A RED
   - COIL PRESENT A
   - TX ENABLE A
   - –15V POWER
   - +15V POWER
   - +24V POWER
   - J21 ON CH. 1–4

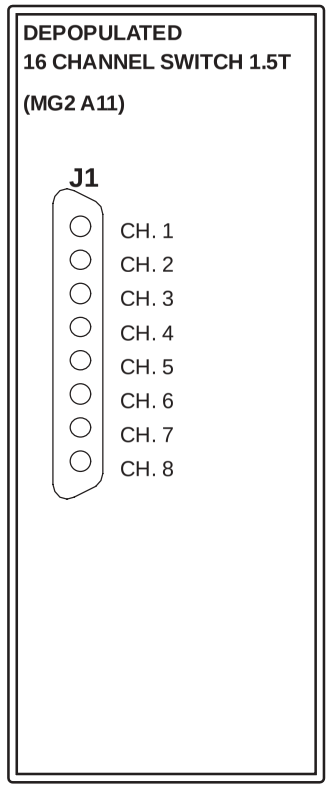

DEPOPULATED HDx (14.x) & HDxt (15.x) MGD/RRF/RF SUBSYSTEM – 8 CHANNEL
16 CHANNEL SWITCH (1.5T)
SHEET 11B OF 16

View from CONNECTOR SIDE of Connector Assembly

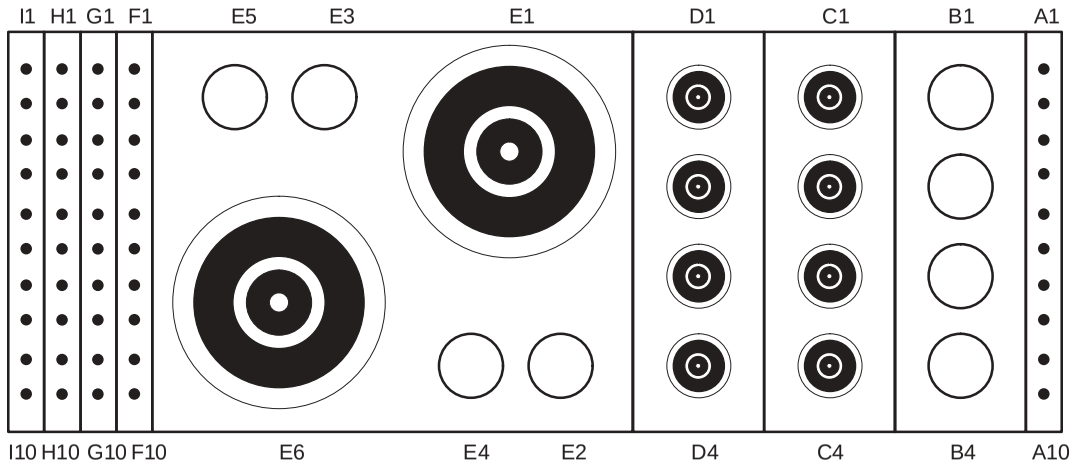

Contact Function Allocation

Pin	Twisted with	Description	Comments
A1	A2	coil present	
A2	A1	coil present return	
A3	A4	multiplexerSelect0	RS–422+
A4	A3	multiplexerSelect0 return	RS–422–
A5	A6	multiplexerSelect1	RS–422+
A6	A5	multiplexerSelect1 return	RS–422–
A7	A8	multiplexerSelect2	RS–422+
A8	A7	multiplexerSelect2 return	RS–422–
A9	A10	multiplexerSelect3	RS–422+
A10	A9	multiplexerSelect3 return	RS–422–
B1	n/a	Key blocked in receptacle E	
B2	n/a	Key blocked in receptacle F	
B3	n/a	Key blocked in receptacle G	
B4	n/a	Key blocked in receptacle H	
C1	n/a	MC–1A,B or MC–9B	Preamp out 1, no bias, DC blocked
C2	n/a	MC–2A,B or MC–10B	Preamp out 2, no bias, DC blocked
C3	n/a	MC–3A,B or MC–11B	Preamp out 3, no bias, DC blocked
C4	n/a	MC–4A,B or MC–12B	Preamp out 4, no bias, DC blocked
D1	n/a	MC–5A,B or MC–13B	Preamp out 5, no bias, DC blocked
D2	n/a	MC–6A,B or MC–14B	Preamp out 6, no bias, DC blocked
D3	n/a	MC–7A,B or MC–15B	Preamp out 7, no bias, DC blocked
D4	n/a	MC–8A,B or MC–16B	Preamp out 8, no bias, DC blocked

EXCITE HD (12.x) MGD/RRF/RF SUBSYSTEM
8 Channel Multicoil “A” and “B” Connector
SHEET 12A OF 16

Contact Function Allocation

Pin	Twisted with	Description	Comments
E1	n/a	Transmit signal up to 2kw (1.5T) or 4kw (3.0T) PEP.	“A” Connector only. Not present in “B” Connector
E2	n/a	Key blocked in receptacle C	
E3	n/a	Key blocked in receptacle A	Blocked for “A”
E4	n/a	Key blocked in receptacle B	Blocked for “B”
E5	n/a	Key blocked in receptacle D	
E6	n/a	Reflected power to 50 ohm load 2.5kw PEP, 50w RMS.	“A” Connector only. Not present in “B” Connector
F1	G1	MC bias 1	MC T/R Bias Line 17 for “A”, 25 for “B”
F2	G2	MC bias 2	MC T/R Bias Line 18 for “A”, 26 for “B”
F3	G3	MC bias 3	MC T/R Bias Line 19 for “A”, 27 for “B”
F4	G4	MC bias 4	MC T/R Bias Line 20 for “A”, 28 for “B”
F5	G5	MC bias 5	MC T/R Bias Line 21 for “A”, 29 for “B”
F6	G6	MC bias 6	MC T/R Bias Line 22 for “A”, 30 for “B”
F7	G7	MC bias 7	MC T/R Bias Line 23 for “A”, 31 for “B”
F8	G8	MC bias 8	MC T/R Bias Line 24 for “A”, 32 for “B”
F9	F10	body transmit enable	
F10	F9	body transmit enable return	
G1	F1	MC bias return 1	MC T/R Bias Line 17 for “A”, 25 for “B”
G2	F2	MC bias return 2	MC T/R Bias Line 18 for “A”, 26 for “B”
G3	F3	MC bias return 3	MC T/R Bias Line 19 for “A”, 27 for “B”
G4	F4	MC bias return 4	MC T/R Bias Line 20 for “A”, 28 for “B”
G5	F5	MC bias return 5	MC T/R Bias Line 21 for “A”, 29 for “B”
G6	F6	MC bias return 6	MC T/R Bias Line 22 for “A”, 30 for “B”
G7	F7	MC bias return 7	MC T/R Bias Line 23 for “A”, 31 for “B”
G8	F8	MC bias return 8	MC T/R Bias Line 24 for “A”, 32 for “B”
G9	n/a	Reserved	
G10	n/a	Reserved	
H1	n/a	Reserved	
H2	n/a	Reserved	
H3	n/a	Reserved	
H4	n/a	Reserved	
H5	n/a	Reserved	
H6	n/a	Reserved	
H7	n/a	Reserved	
H8	n/a	Reserved	
H9	n/a	Reserved	
H10	n/a	Reserved	
I1	n/a	Reserved	
I2	I5	+15Vdc (auxiliary & preamp power)	
I3	I6	+10Vdc (auxiliary & preamp power)	
I4	n/a	–15Vdc (auxiliary power)	
I5	I2	Return for aux power	
I6	I3	Return for aux power	
I7	I8	coil ID (Dallas OneWire protocol)	All coils MUST have coil ID.
I8	I7	coil ID return (Dallas OneWire protocol)	All coils MUST have coil ID.
I9	I10	coil present’	
I10	I9	coil present return’	

View from CONNECTOR SIDE of Connector Assembly

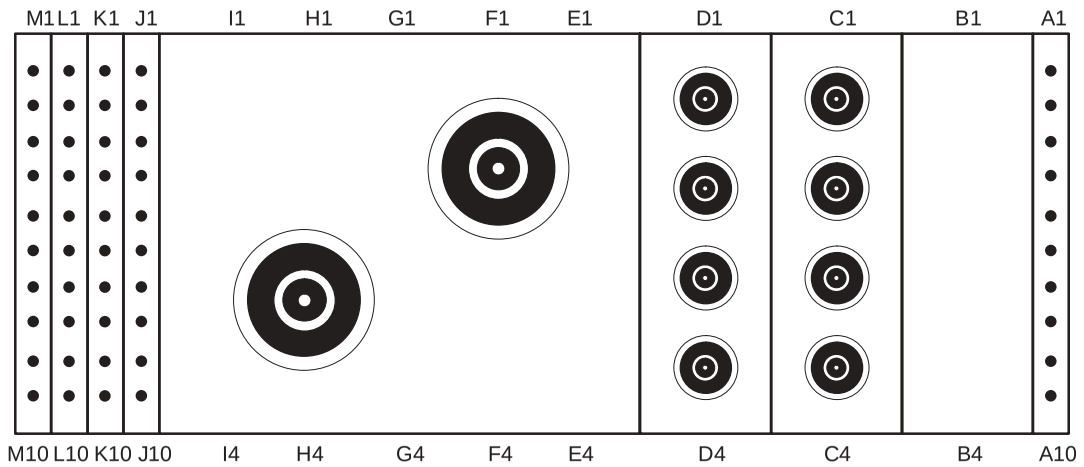

Contact Function Allocation

Pin	Twisted with	Description	Comments
A1	A2	coil present	
A2	A1	coil present return	
A3	A4	multiplexerSelect0	RS–422+
A4	A3	multiplexerSelect0 return	RS–422–
A5	A6	multiplexerSelect1	RS–422+
A6	A5	multiplexerSelect1 return	RS–422–
A7	A8	multiplexerSelect2	RS–422+
A8	A7	multiplexerSelect2 return	RS–422–
A9	A10	multiplexerSelect3	RS–422+
A10	A9	multiplexerSelect3 return	RS–422–
B1	n/a	Key blocked in receptacle E	
B2	n/a	Key blocked in receptacle F	
B3	n/a	Key blocked in receptacle G	
B4	n/a	Key blocked in receptacle H	
C1	n/a	MC–A1	Preamp out 1, no bias, DC blocked
C2	n/a	MC–A2	Preamp out 2, no bias, DC blocked
C3	n/a	MC–A3	Preamp out 3, no bias, DC blocked
C4	n/a	MC–A4	Preamp out 4, no bias, DC blocked
D1	n/a	MC–A5	Preamp out 5, no bias, DC blocked
D2	n/a	MC–A6	Preamp out 6, no bias, DC blocked
D3	n/a	MC–A7	Preamp out 7, no bias, DC blocked
D4	n/a	MC–A8	Preamp out 8, no bias, DC blocked

HDx (14.x) & HDxt (1.5.x) MGD/RRF/RF SUBSYSTEM
Multicoil “A+” Connector – Forward Production
SHEET 12B OF 16

Contact Function Allocation

Pin	Twisted with	Description	Comments
F2	n/a	Transmit Signal up to 8kw PEP	
H3	n/a	Reflected power to 50 ohm load 2.5kw PEP, 50w RMS	“A” connector only
J1	K1	MC bias 1	
J2	K2	MC bias 2	
J3	K3	MC bias 3	
J4	K4	MC bias 4	
J5	K5	MC bias 5	
J6	K6	MC bias 6	
J7	K7	MC bias 7	
J8	K8	MC bias 8	
J9	J10	body transmit enable	
J10	J9	body transmit enable return	
K1	J1	MC bias return 1	
K2	J2	MC bias return 2	
K3	J3	MC bias return 3	
K4	J4	MC bias return 4	
K5	J5	MC bias return 5	
K6	J6	MC bias return 6	
K7	J7	MC bias return 7	
K8	J8	MC bias return 8	
K9	K10	System preamp enable return	
K10	K9	System preamp enable	
L1	n/a	Reserved	
L2	n/a	Reserved	
L3	n/a	Reserved	
L4	n/a	Reserved	
L5	n/a	Reserved	
L6	n/a	Reserved	
L7	n/a	Reserved	
L8	n/a	Reserved	
L9	n/a	Reserved	
L10	n/a	Reserved	
M1	n/a	Reserved	
M2	M5	+15Vdc (auxiliary & preamp power)	
M3	M6	+10Vdc (auxiliary & preamp power)	
M4	n/a	–15Vdc (auxiliary power)	
M5	M2	Return for aux power	
M6	M3	Return for aux power	
M7	M8	coil ID (Dallas OneWire protocol)	All coils MUST have coil ID.
M8	M7	coil ID return (Dallas OneWire protocol)	All coils MUST have coil ID.
M9	M10	coil present’	
M10	M9	coil present return’	

View from CONNECTOR SIDE of Connector Assembly

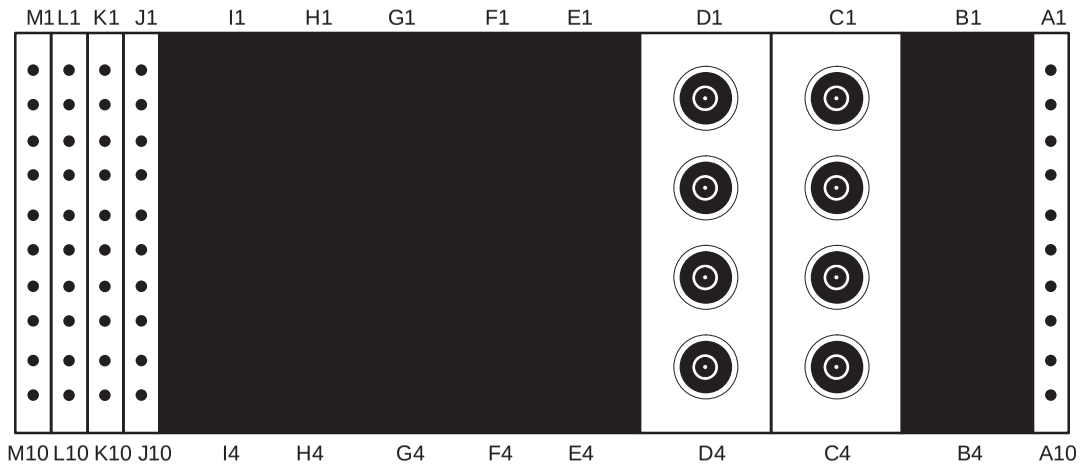

Contact Function Allocation

Pin	Twisted with	Description	Comments
A1	A2	coil present	
A2	A1	coil present return	
A3	A4	multiplexerSelect0	RS–422+
A4	A3	multiplexerSelect0 return	RS–422–
A5	A6	multiplexerSelect1	RS–422+
A6	A5	multiplexerSelect1 return	RS–422–
A7	A8	multiplexerSelect2	RS–422+
A8	A7	multiplexerSelect2 return	RS–422–
A9	A10	multiplexerSelect3	RS–422+
A10	A9	multiplexerSelect3 return	RS–422–
B1	n/a		
B2	n/a		
B3	n/a		
B4	n/a		
C1	n/a	MC–B1	Preamp out 1, MC bias 1 (9)
C2	n/a	MC–B2	Preamp out 2, MC bias 2 (10)
C3	n/a	MC–B3	Preamp out 3, MC bias 3 (11)
C4	n/a	MC–B4	Preamp out 4, MC bias 4 (12)
D1	n/a	MC–B5	Preamp out 5, MC bias 5 (13)
D2	n/a	MC–B6	Preamp out 6, MC bias 6 (14)
D3	n/a	MC–B7	Preamp out 7, MC bias 7 (15)
D4	n/a	MC–B8	Preamp out 8, MC bias 8 (16)

HDx (14.x) & HDxt (1.5.x) MGD/RRF/RF SUBSYSTEM
Multicoil “B8” Connector – Forward Production
SHEET 12C OF 16

Contact Function Allocation

Pin	Twisted with	Description	Comments
F2	n/a		
J1	K1	MC bias 1 (9)	
J2	K2	MC bias 2 (10)	
J3	K3	MC bias 3 (11)	
J4	K4	MC bias 4 (12)	
J5	K5	MC bias 5 (13)	
J6	K6	MC bias 6 (14)	
J7	K7	MC bias 7 (15)	
J8	K8	MC bias 8 (16)	
J9	J10	body transmit enable	
J10	J9	body transmit enable return	
K1	J1	MC bias return 1 (9)	
K2	J2	MC bias return 2 (10)	
K3	J3	MC bias return 3 (11)	
K4	J4	MC bias return 4 (12)	
K5	J5	MC bias return 5 (13)	
K6	J6	MC bias return 6 (14)	
K7	J7	MC bias return 7 (15)	
K8	J8	MC bias return 8 (16)	
K9	K10	System preamp enable return	
K10	K9	System preamp enable	
L1	n/a	Reserved	
L2	n/a	Reserved	
L3	n/a	Reserved	
L4	n/a	Reserved	
L5	n/a	Reserved	
L6	n/a	Reserved	
L7	n/a	Reserved	
L8	n/a	Reserved	
L9	n/a	Reserved	
L10	n/a	Reserved	
M1	n/a	Reserved	
M2	M5	+15Vdc (auxiliary & preamp power)	
M3	M6	+10Vdc (auxiliary & preamp power)	
M4	n/a	–15Vdc (auxiliary power)	
M5	M2	Return for aux power	
M6	M3	Return for aux power	
M7	M8	coil ID (Dallas OneWire protocol)	All coils MUST have coil ID.
M8	M7	coil ID return (Dallas OneWire protocol)	All coils MUST have coil ID.
M9	M10	coil present’	
M10	M9	coil present return’	

View from CONNECTOR SIDE of Connector Assembly

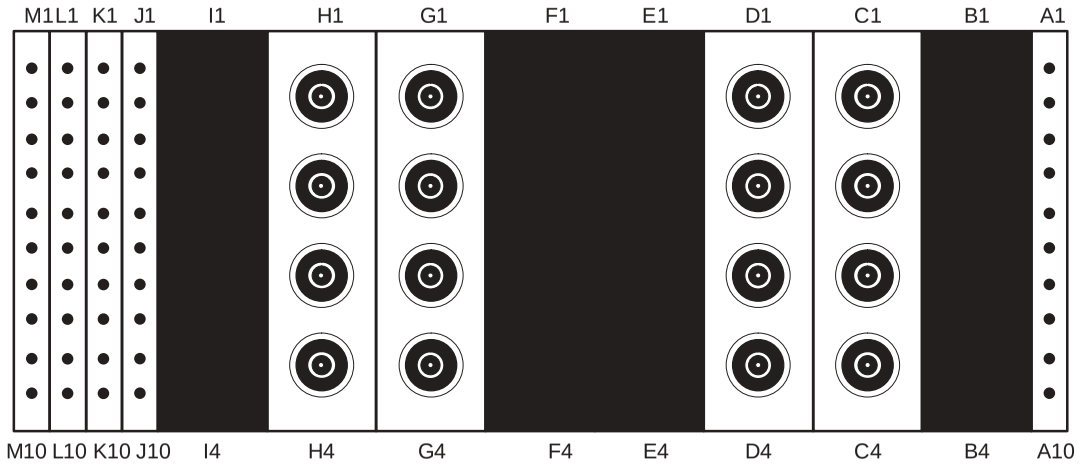

Contact Function Allocation

Pin	Twisted with	Description	Comments
A1	A2	coil present	
A2	A1	coil present return	
A3	A4	multiplexerSelect0	RS–422+
A4	A3	multiplexerSelect0 return	RS–422–
A5	A6	multiplexerSelect1	RS–422+
A6	A5	multiplexerSelect1 return	RS–422–
A7	A8	multiplexerSelect2	RS–422+
A8	A7	multiplexerSelect2 return	RS–422–
A9	A10	multiplexerSelect3	RS–422+
A10	A9	multiplexerSelect3 return	RS–422–
C1	n/a	MC–B1 or MC–C1, MC bias 1B (9), 1C (25)	Preamp out 1, MC bias 1B (9), 1C (25)
C2	n/a	MC–B2 or MC–C2, MC bias 2B (10), 2C (26)	Preamp out 2, MC bias 2B (10), 2C (26)
C3	n/a	MC–B3 or MC–C3, MC bias 3B (11), 3C (27)	Preamp out 3, MC bias 3B (11), 3C (27)
C4	n/a	MC–B4 or MC–C4, MC bias 4B (12), 4C (28)	Preamp out 4, MC bias 4B (12), 4C (28)
D1	n/a	MC–B5 or MC–C5, MC bias 5B (13), 5C (29)	Preamp out 5, MC bias 5B (13), 5C (29)
D2	n/a	MC–B6 or MC–C6, MC bias 6B (14), 6C (30)	Preamp out 6, MC bias 6B (14), 6C (30)
D3	n/a	MC–B7 or MC–C7, MC bias 7B (15), 7C (31)	Preamp out 7, MC bias 7B (15), 7C (31)
D4	n/a	MC–B8 or MC–C8, MC bias 8B (16), 8C (32)	Preamp out 8, MC bias 8B (16), 8C (32)
G1	n/a	MC–B9 or MC–C9, MC bias 9B (25), 9C (1)	Preamp out 1, MC bias 9B (25), 9C (1)
G2	n/a	MC–B10 or MC–102, MC bias 10B (26), 10C (2)	Preamp out 2, MC bias 10B (26), 10C (2)
G3	n/a	MC–B11 or MC–C11, MC bias 11B (27), 11C (3)	Preamp out 3, MC bias 11B (27), 11C (3)
G4	n/a	MC–B12 or MC–C12, MC bias 12B (28), 12C (4)	Preamp out 4, MC bias 12B (28), 12C (4)
H1	n/a	MC–B13 or MC–C13, MC bias 13B (29), 13C (5)	Preamp out 5, MC bias 13B (29), 13C (5)
H2	n/a	MC–B14 or MC–C14, MC bias 14B (30), 14C (6)	Preamp out 6, MC bias 14B (30), 14C (6)
H3	n/a	MC–B15 or MC–C15, MC bias 15B (31), 15C (7)	Preamp out 7, MC bias 15B (31), 15C (7)
H4	n/a	MC–B16 or MC–C16, MC bias 16B (32), 16C (8)	Preamp out 8, MC bias 16B (32), 16C (8)

Contact Function Allocation

Pin	Twisted with	Description	Comments
J1	K1	MC bias 1 (9)–B / MC bias 1 (25)–C	
J2	K2	MC bias 2 (10)–B / MC bias 2 (26)–C	
J3	K3	MC bias 3 (11)–B / MC bias 3 (27)–C	
J4	K4	MC bias 4 (12)–B / MC bias 4 (28)–C	
J5	K5	MC bias 5 (13)–B / MC bias 5 (29)–C	
J6	K6	MC bias 6 (14)–B / MC bias 6 (30)–C	
J7	K7	MC bias 7 (15)–B / MC bias 7 (31)–C	
J8	K8	MC bias 8 (16)–B / MC bias 8 (32)–C	
J9	J10	body transmit enable	
J10	J9	body transmit enable return	
K1	J1	MC bias return 1 (25)–B / MC bias return 1 (1)–C	
K2	J2	MC bias return 2 (26)–B / MC bias return 2 (2)–C	
K3	J3	MC bias return 3 (27)–B / MC bias return 3 (3)–C	
K4	J4	MC bias return 4 (28)–B / MC bias return 4 (4)–C	
K5	J5	MC bias return 5 (29)–B / MC bias return 5 (5)–C	
K6	J6	MC bias return 6 (30)–B / MC bias return 6 (6)–C	
K7	J7	MC bias return 7 (31)–B / MC bias return 7 (7)–C	
K8	J8	MC bias return 8 (32)–B / MC bias return 8 (8)–C	
K9	K10	System preamp enable return	
K10	K9	System preamp enable	
L1	n/a	Reserved	
L2	n/a	Reserved	
L3	n/a	Reserved	
L4	n/a	Reserved	
L5	n/a	Reserved	
L6	n/a	Reserved	
L7	n/a	Reserved	
L8	n/a	Reserved	
L9	n/a	Reserved	
L10	n/a	Reserved	
M1	n/a	Reserved	
M2	M5	+15Vdc (auxiliary & preamp power)	
M3	M6	+10Vdc (auxiliary & preamp power)	
M4	n/a	–15Vdc (auxiliary power)	
M5	M2	Return for aux power	
M6	M3	Return for aux power	
M7	M8	coil ID (Dallas OneWire protocol)	All coils MUST have coil ID.
M8	M7	coil ID return (Dallas OneWire protocol)	All coils MUST have coil ID.
M9	M10	coil present’	
M10	M9	coil present return’	

HDx (14.x) & HDxt (1.5.x) MGD/RRF/RF SUBSYSTEM
Multicoil “B16” and “C16” Connector – Forward Production
SHEET 12D OF 16

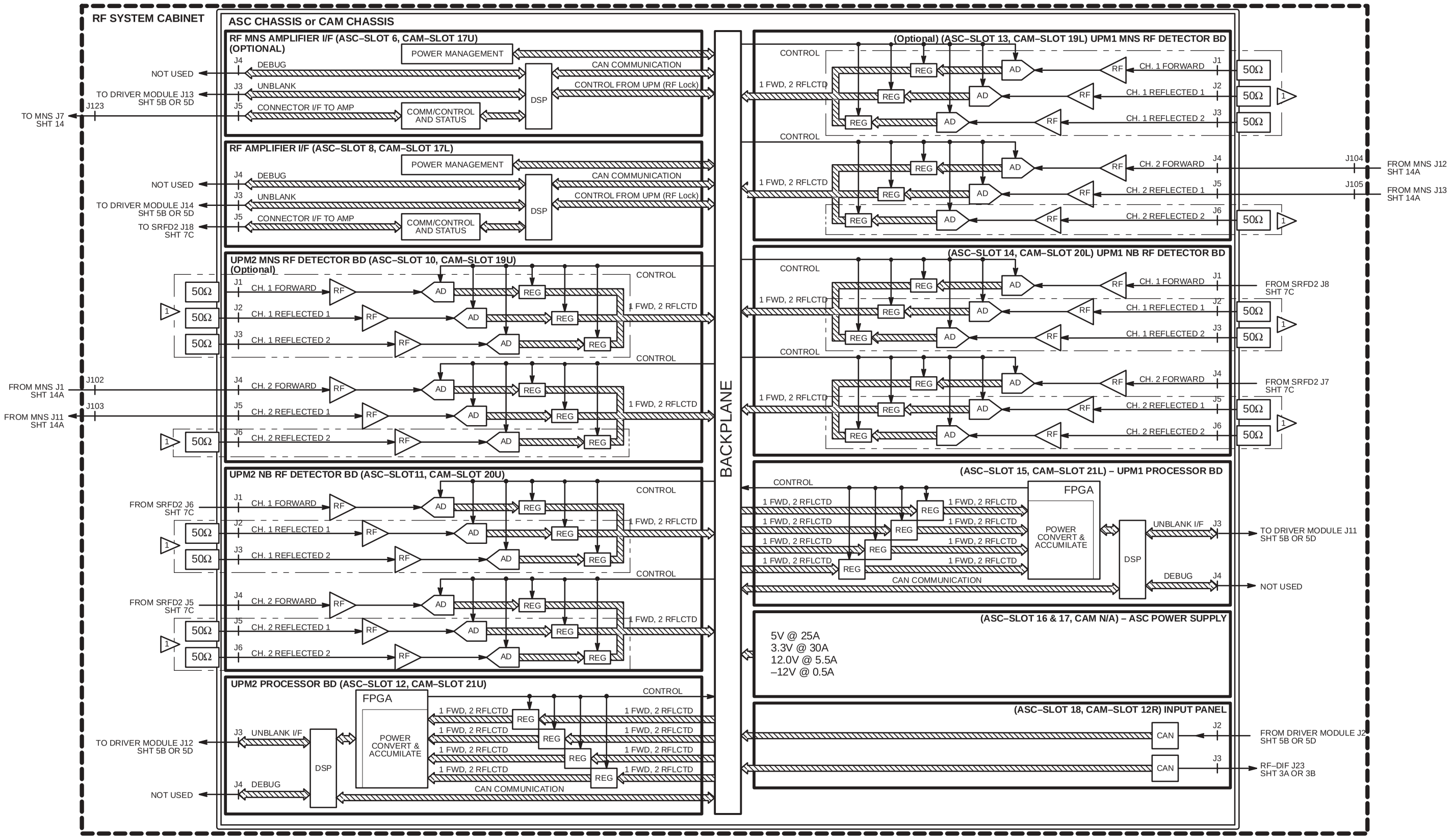

EXCITE HD (12.x), HDx (14.x) & HDxt (1.5.x) MGD/RRF/RF SUBSYSTEM
ASC CHASSIS
SHEET 13 OF 16

NOTES:
1 Sections enclosed by dotted lines are not present with new Detector Board, part # 5250154.

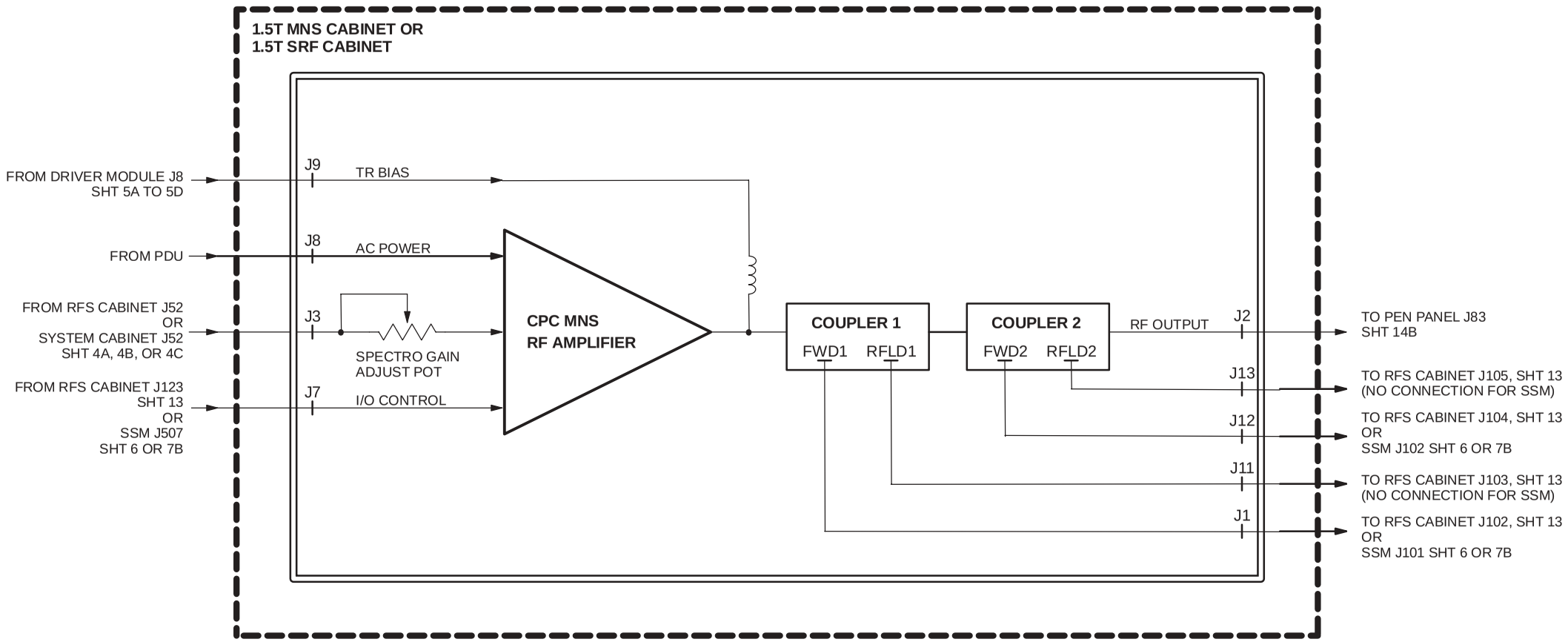

EXCITE HD (12.x) & HDx (14.x) & HDxt (1.5.x) MGD/RRF/RF SUBSYSTEM
MNS RF Amplifier (Optional Forward Production MNS)
SHEET 14A OF 16

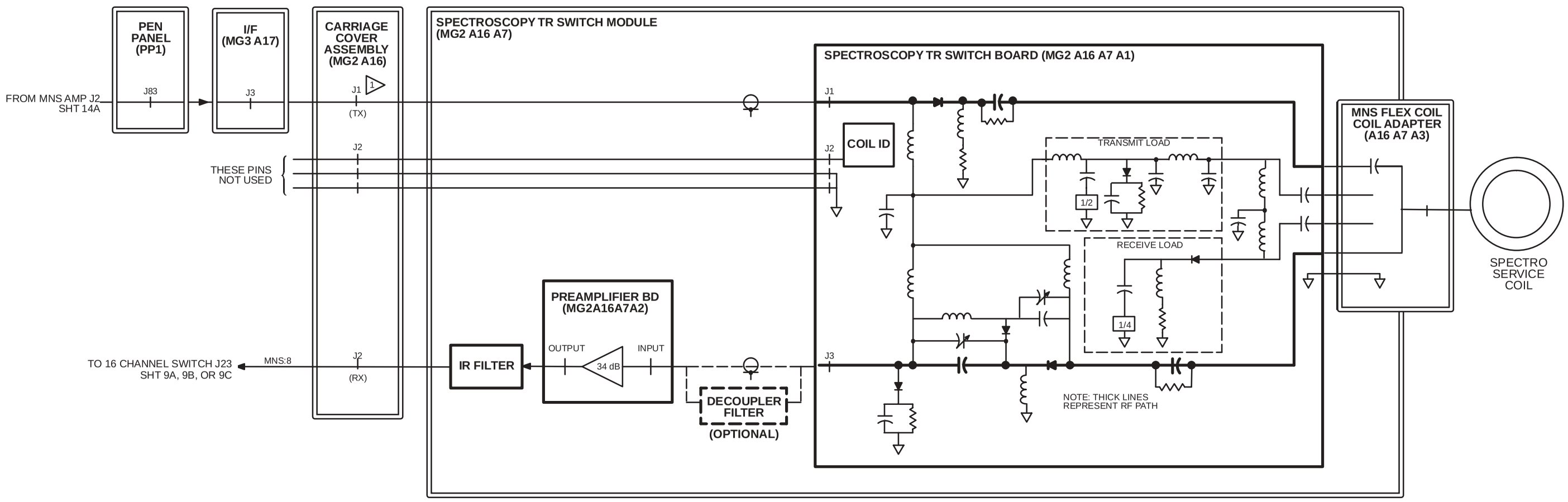

NOTES:

1 SHV Thick Coax Pasternack PE–4194 connector.

EXCITE HD (12.x), HDx (14.x) & HDxt (1.5.x) MGD/RRF/RF SUBSYSTEM
MNS Interconnects (Optional Forward Production MNS)
SHEET 14B OF 16

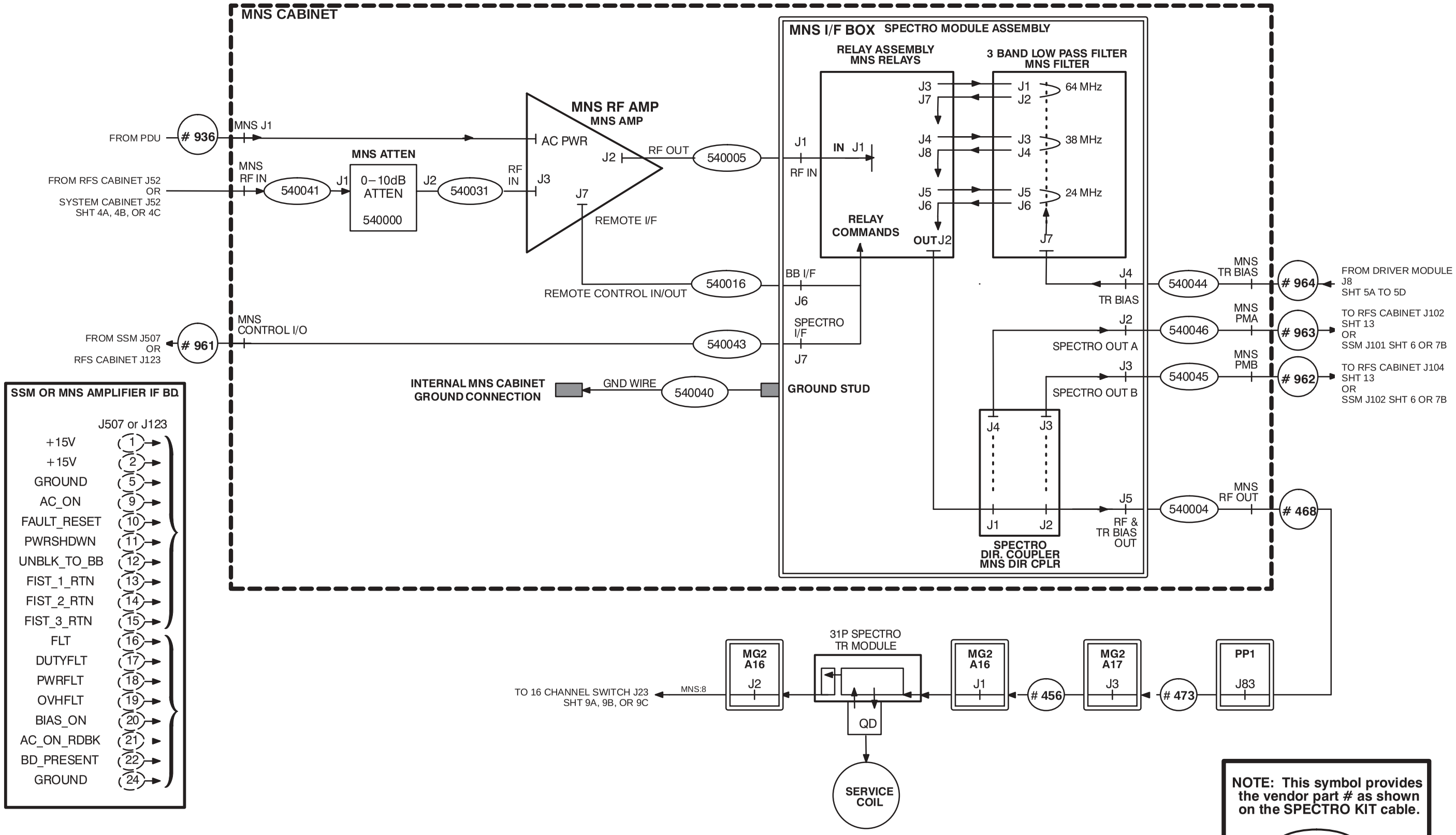

EXCITE HD (12.x), HDx (14.x) & HDxt (1.5.x) MGD/RRF/RF SUBSYSTEM
MNS Interconnects (Optional MNS Upgrade Only)
SHEET 14C OF 16

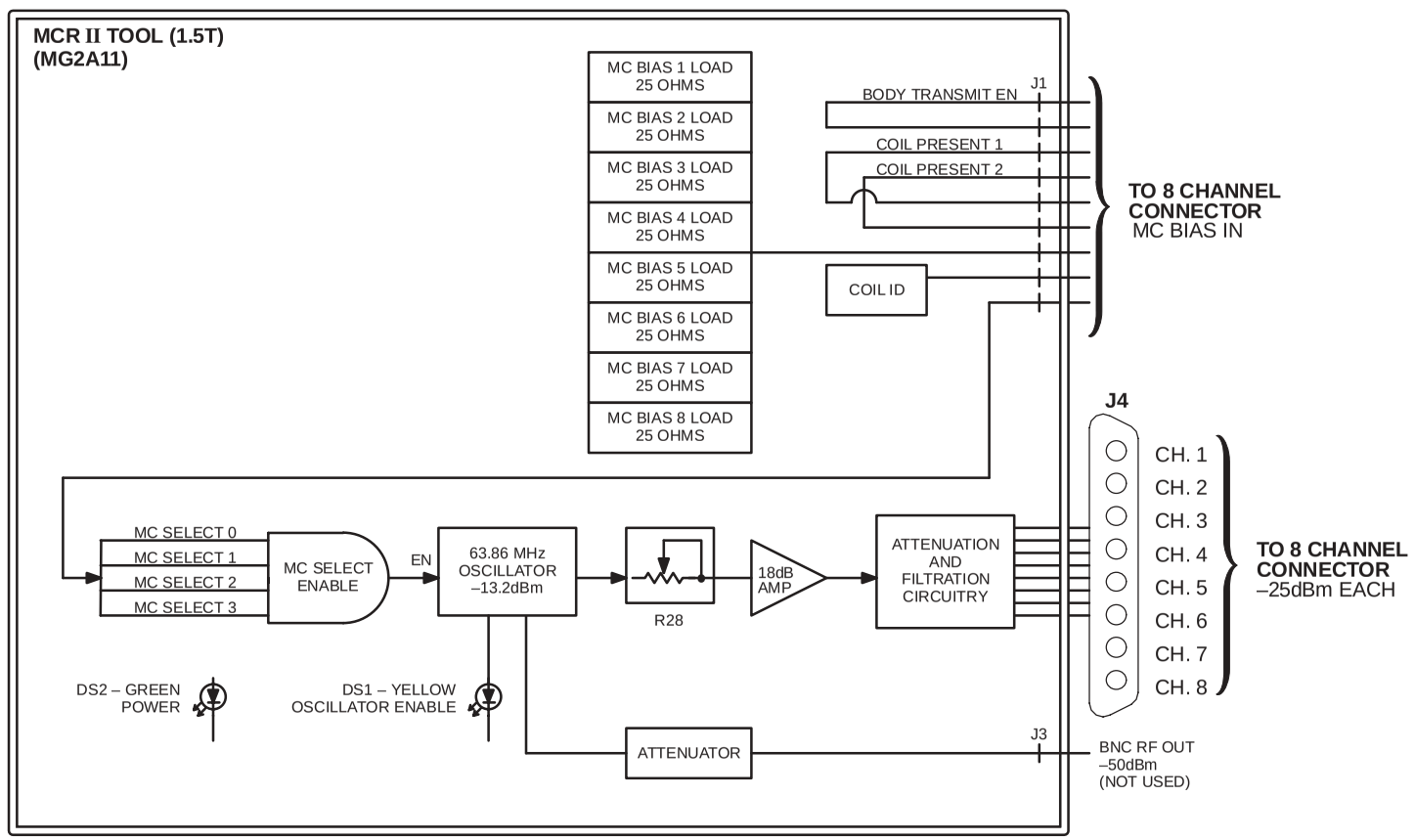

J1	
PINS	**SIGNAL**
1	MC Bias 1
2	MC Bias 2
3	MC Bias 3
4	MC Bias 4
5	MC Bias 5
6	MC Bias 6
7	MC Bias 7
8	MC Bias 8
9	MC Select 0
10	MC Select 1
11	MC Select 2
12	MC Select 3
13	Body Transmit Enable
14	Coil ID
15	Coil Present 15
16	Coil Present 2
17	+15VDC (Auxiliary Power)
18	+10VDC (Auxiliary Power)
19	–15VDC (Auxiliary Power)
20	MC Bias Return 1
21	MC Bias Return 2
22	MC Bias Return 3
23	MC Bias Return 4
24	MC Bias Return 5
25	MC Bias Return 6
26	MC Bias Return 7
27	MC Bias Return 8
28	MC Select 0 Return
29	MC Select 1 Return
30	MC Select 2 Return
31	MC Select 3 Return
32	Body Transmit Enable Return
33	Coil ID Return
34	Coil Present Return 1
35	Coil Present Return 2
36	Auxiliary Power Return
37	Auxiliary Power Return

EXCITE HD (12.x) MGD/RRF/RF SUBSYSTEM
MCR II Tool and Cable
SHEET 15A OF 16

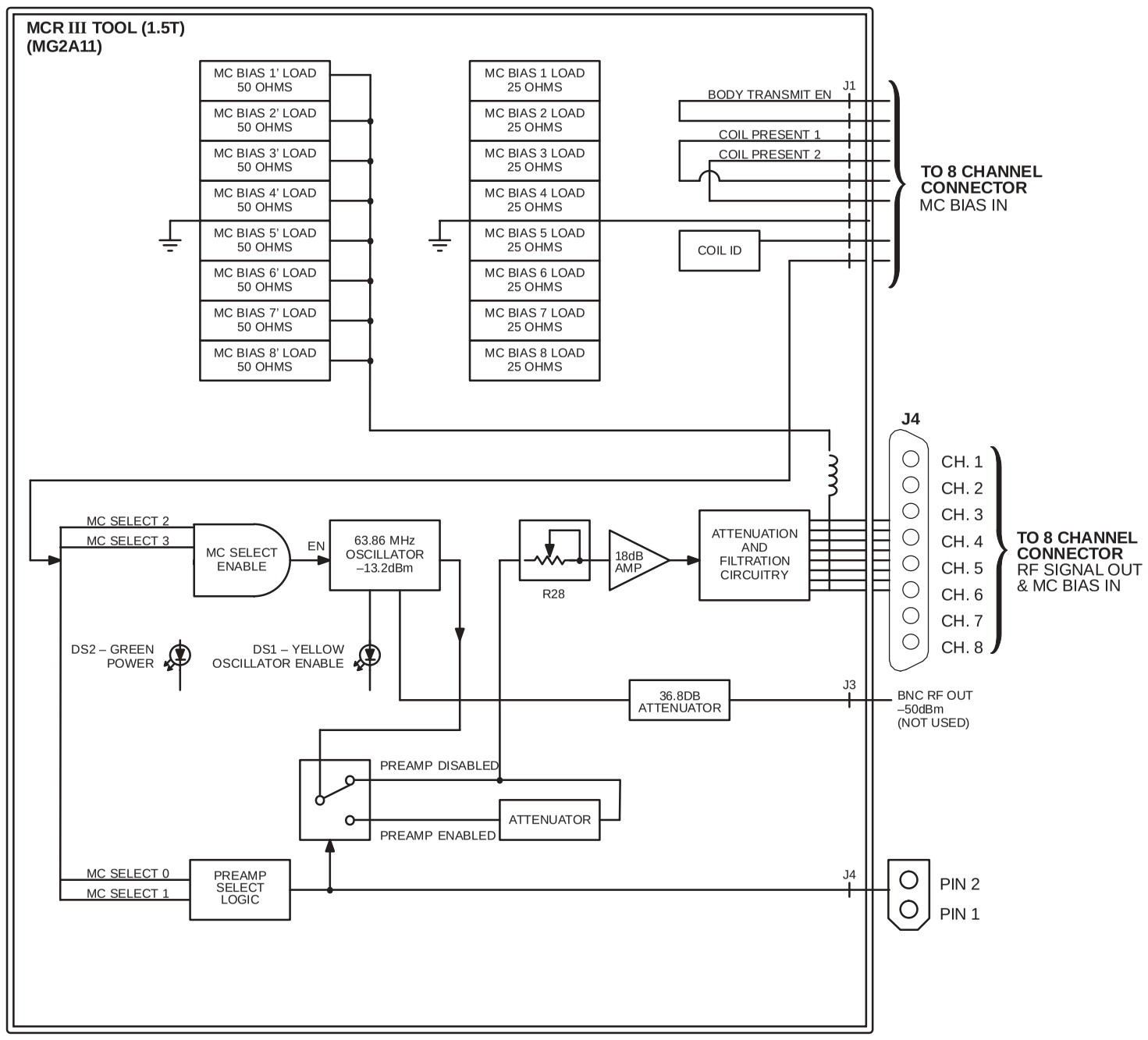

J1	
PINS	**SIGNAL**
1	MC Bias 1
2	MC Bias 2
3	MC Bias 3
4	MC Bias 4
5	MC Bias 5
6	MC Bias 6
7	MC Bias 7
8	MC Bias 8
9	MC Select 0
10	MC Select 1
11	MC Select 2
12	MC Select 3
13	Body Transmit Enable
14	Coil ID
15	Coil Present 15
16	Coil Present 2
17	+15VDC (Auxiliary Power)
18	+10VDC (Auxiliary Power)
19	–15VDC (Auxiliary Power)
20	MC Bias Return 1
21	MC Bias Return 2
22	MC Bias Return 3
23	MC Bias Return 4
24	MC Bias Return 5
25	MC Bias Return 6
26	MC Bias Return 7
27	MC Bias Return 8
28	MC Select 0 Return
29	MC Select 1 Return
30	MC Select 2 Return
31	MC Select 3 Return
32	Body Transmit Enable Return
33	Coil ID Return
34	Coil Present Return 1
35	Coil Present Return 2
36	Auxiliary Power Return
37	Auxiliary Power Return

J4	
PINS	**SIGNAL**
1	Preamp Enable
2	Preamp Enable RTN

HDx (14.x) & HDxt (1.5.x) MGD/RRF/RF SUBSYSTEM
MCR III Tool and Cable
SHEET 15B OF 16

View from CONNECTOR SIDE of 8 Channel Connector Assembly

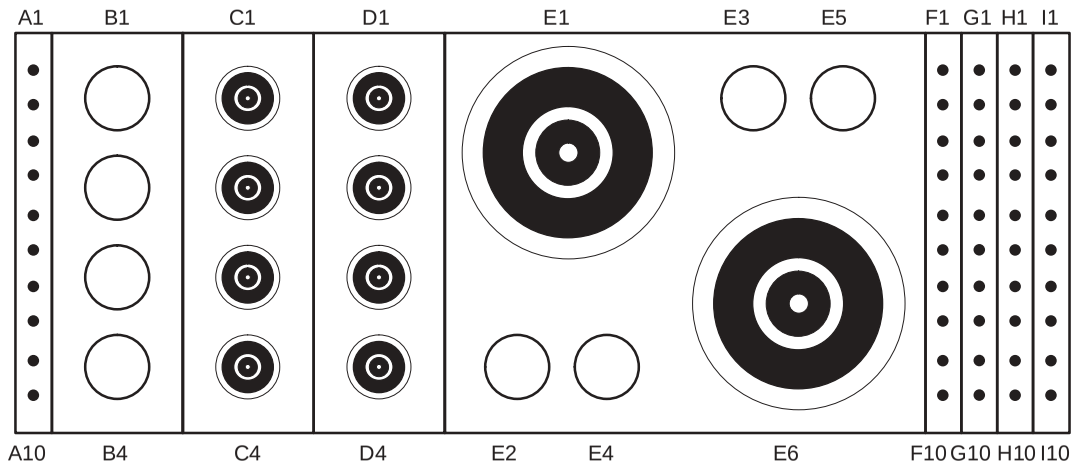

Contact Function Allocation

Pin	Twisted with	Description	Comments
A1	A2	coil present	
A2	A1	coil present return	
A3	A4	multiplexerSelect0	RS–422+
A4	A3	multiplexerSelect0 return	RS–422–
A5	A6	multiplexerSelect1	RS–422+
A6	A5	multiplexerSelect1 return	RS–422–
A7	A8	multiplexerSelect2	RS–422+
A8	A7	multiplexerSelect2 return	RS–422–
A9	A10	multiplexerSelect3	RS–422+
A10	A9	multiplexerSelect3 return	RS–422–
B1	n/a		Not used
B2	n/a		Not used
B3	n/a		Not used
B4	n/a		Not used
C1	n/a	MC–1A,B or MC–9B	Preamp out 1, no bias, DC blocked
C2	n/a	MC–2A,B or MC–10B	Preamp out 2, no bias, DC blocked
C3	n/a	MC–3A,B or MC–11B	Preamp out 3, no bias, DC blocked
C4	n/a	MC–4A,B or MC–12B	Preamp out 4, no bias, DC blocked
D1	n/a	MC–5A,B or MC–13B	Preamp out 5, no bias, DC blocked
D2	n/a	MC–6A,B or MC–14B	Preamp out 6, no bias, DC blocked
D3	n/a	MC–7A,B or MC–15B	Preamp out 7, no bias, DC blocked
D4	n/a	MC–8A,B or MC–16B	Preamp out 8, no bias, DC blocked

EXCITE HD (12.x) MGD/RRF/RF SUBSYSTEM
MCR II Tool – 8 Channel Connector
SHEET 16A OF 16

Contact Function Allocation

Pin	Twisted with	Description	Comments
E1	n/a	Open	Not used
E2	n/a	Open	Not used
E3	n/a	Open	Not used
E4	n/a	Open	Not used
E5	n/a	Open	Not used
E6	n/a	Open	Not used
F1	G1	MC bias 1	MC T/R Bias Line 17 for “A”, 25 for “B”
F2	G2	MC bias 2	MC T/R Bias Line 18 for “A”, 26 for “B”
F3	G3	MC bias 3	MC T/R Bias Line 19 for “A”, 27 for “B”
F4	G4	MC bias 4	MC T/R Bias Line 20 for “A”, 28 for “B”
F5	G5	MC bias 5	MC T/R Bias Line 21 for “A”, 29 for “B”
F6	G6	MC bias 6	MC T/R Bias Line 22 for “A”, 30 for “B”
F7	G7	MC bias 7	MC T/R Bias Line 23 for “A”, 31 for “B”
F8	G8	MC bias 8	MC T/R Bias Line 24 for “A”, 32 for “B”
F9	F10	body transmit enable	
F10	F9	body transmit enable return	
G1	F1	MC bias return 1	MC T/R Bias Line 17 for “A”, 25 for “B”
G2	F2	MC bias return 2	MC T/R Bias Line 18 for “A”, 26 for “B”
G3	F3	MC bias return 3	MC T/R Bias Line 19 for “A”, 27 for “B”
G4	F4	MC bias return 4	MC T/R Bias Line 20 for “A”, 28 for “B”
G5	F5	MC bias return 5	MC T/R Bias Line 21 for “A”, 29 for “B”
G6	F6	MC bias return 6	MC T/R Bias Line 22 for “A”, 30 for “B”
G7	F7	MC bias return 7	MC T/R Bias Line 23 for “A”, 31 for “B”
G8	F8	MC bias return 8	MC T/R Bias Line 24 for “A”, 32 for “B”
G9	n/a	Reserved	
G10	n/a	Reserved	
H1	n/a	Reserved	
H2	n/a	Reserved	
H3	n/a	Reserved	
H4	n/a	Reserved	
H5	n/a	Reserved	
H6	n/a	Reserved	
H7	n/a	Reserved	
H8	n/a	Reserved	
H9	n/a	Reserved	
H10	n/a	Reserved	
I1	n/a	Reserved	
I2	I5	+15Vdc (auxiliary & preamp power)	
I3	I6	+10Vdc (auxiliary & preamp power)	
I4	n/a	–15Vdc (auxiliary power)	
I5	I2	Return for aux power	
I6	I3	Return for aux power	
I7	I8	coil ID (Dallas OneWire protocol)	All coils MUST have coil ID.
I8	I7	coil ID return (Dallas OneWire protocol)	All coils MUST have coil ID.
I9	I10	coil present’	
I10	I9	coil present return’	

View from CONNECTOR SIDE of 8 Channel Connector Assembly

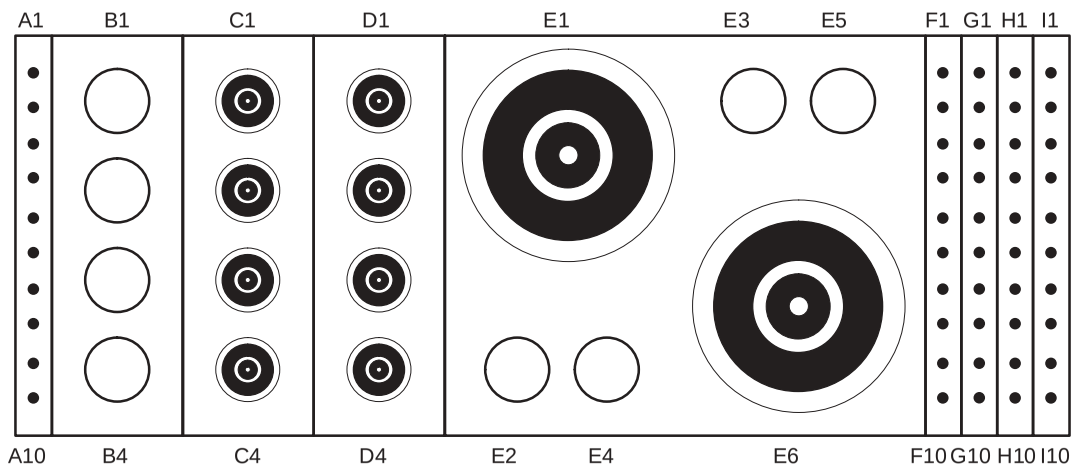

Contact Function Allocation

Pin	Twisted with	Description	Comments
A1	A2	coil present	
A2	A1	coil present return	
A3	A4	multiplexerSelect0	RS–422+
A4	A3	multiplexerSelect0 return	RS–422–
A5	A6	multiplexerSelect1	RS–422+
A6	A5	multiplexerSelect1 return	RS–422–
A7	A8	multiplexerSelect2	RS–422+
A8	A7	multiplexerSelect2 return	RS–422–
A9	A10	multiplexerSelect3	RS–422+
A10	A9	multiplexerSelect3 return	RS–422–
B1	n/a		Not used
B2	n/a		Not used
B3	n/a		Not used
B4	n/a		Not used
C1	n/a	MC–1A,B or MC–9B	Preamp out 1, no bias, DC blocked
C2	n/a	MC–2A,B or MC–10B	Preamp out 2, no bias, DC blocked
C3	n/a	MC–3A,B or MC–11B	Preamp out 3, no bias, DC blocked
C4	n/a	MC–4A,B or MC–12B	Preamp out 4, no bias, DC blocked
D1	n/a	MC–5A,B or MC–13B	Preamp out 5, no bias, DC blocked
D2	n/a	MC–6A,B or MC–14B	Preamp out 6, no bias, DC blocked
D3	n/a	MC–7A,B or MC–15B	Preamp out 7, no bias, DC blocked
D4	n/a	MC–8A,B or MC–16B	Preamp out 8, no bias, DC blocked

HDx (14.x) & HDxt (1.5.x) MGD/RRF/RF SUBSYSTEM
MCR III Tool – 8 Channel Connector
SHEET 16B OF 16

Contact Function Allocation

Pin	Twisted with	Description	Comments
E1	n/a	Open	Not used
E2	n/a	Open	Not used
E3	n/a	Open	Not used
E4	n/a	Open	Not used
E5	n/a	Open	Not used
E6	n/a	Open	Not used
F1	G1	MC bias 1	MC T/R Bias Line 17 for “A”, 25 for “B”
F2	G2	MC bias 2	MC T/R Bias Line 18 for “A”, 26 for “B”
F3	G3	MC bias 3	MC T/R Bias Line 19 for “A”, 27 for “B”
F4	G4	MC bias 4	MC T/R Bias Line 20 for “A”, 28 for “B”
F5	G5	MC bias 5	MC T/R Bias Line 21 for “A”, 29 for “B”
F6	G6	MC bias 6	MC T/R Bias Line 22 for “A”, 30 for “B”
F7	G7	MC bias 7	MC T/R Bias Line 23 for “A”, 31 for “B”
F8	G8	MC bias 8	MC T/R Bias Line 24 for “A”, 32 for “B”
F9	F10	body transmit enable	
F10	F9	body transmit enable return	
G1	F1	MC bias return 1	MC T/R Bias Line 17 for “A”, 25 for “B”
G2	F2	MC bias return 2	MC T/R Bias Line 18 for “A”, 26 for “B”
G3	F3	MC bias return 3	MC T/R Bias Line 19 for “A”, 27 for “B”
G4	F4	MC bias return 4	MC T/R Bias Line 20 for “A”, 28 for “B”
G5	F5	MC bias return 5	MC T/R Bias Line 21 for “A”, 29 for “B”
G6	F6	MC bias return 6	MC T/R Bias Line 22 for “A”, 30 for “B”
G7	F7	MC bias return 7	MC T/R Bias Line 23 for “A”, 31 for “B”
G8	F8	MC bias return 8	MC T/R Bias Line 24 for “A”, 32 for “B”
G9	G10	Preamp Enable	
G10	G9	Preamp Enable Return	
H1	n/a	Reserved	
H2	n/a	Reserved	
H3	n/a	Reserved	
H4	n/a	Reserved	
H5	n/a	Reserved	
H6	n/a	Reserved	
H7	n/a	Reserved	
H8	n/a	Reserved	
H9	n/a	Reserved	
H10	n/a	Reserved	
I1	n/a	Reserved	
I2	I5	+15Vdc (auxiliary & preamp power)	
I3	I6	+10Vdc (auxiliary & preamp power)	
I4	n/a	–15Vdc (auxiliary power)	
I5	I2	Return for aux power	
I6	I3	Return for aux power	
I7	I8	coil ID (Dallas OneWire protocol)	All coils MUST have coil ID.
I8	I7	coil ID return (Dallas OneWire protocol)	All coils MUST have coil ID.
I9	I10	coil present’	
I10	I9	coil present return’	

SECTION 2 – MGD/RRF/RF SUBSYSTEM SUPPLEMENTAL SCHEMATICS (1.5T)

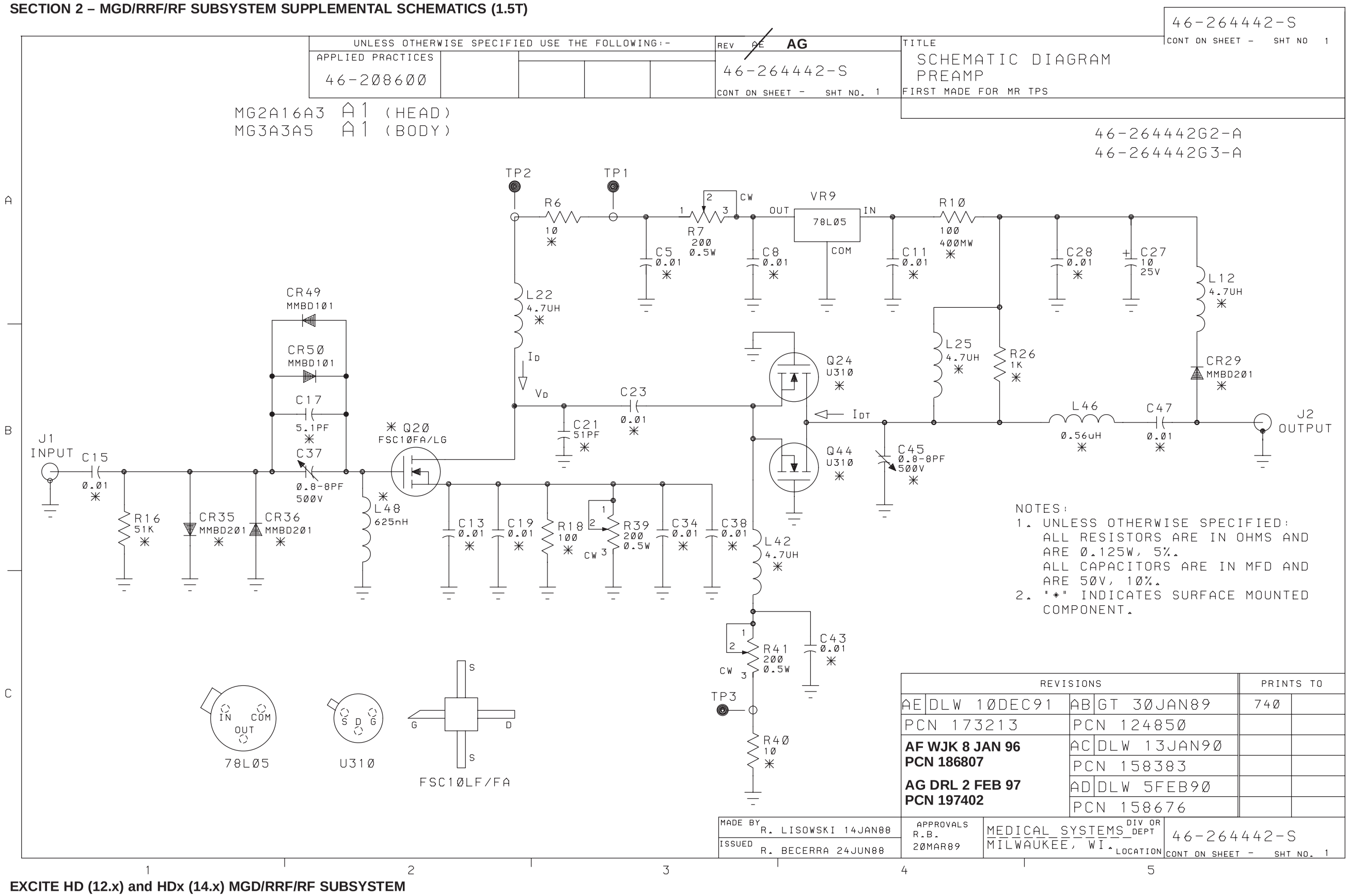

EXCITE HD (12.x) and HDx (14.x) MGD/RRF/RF SUBSYSTEM

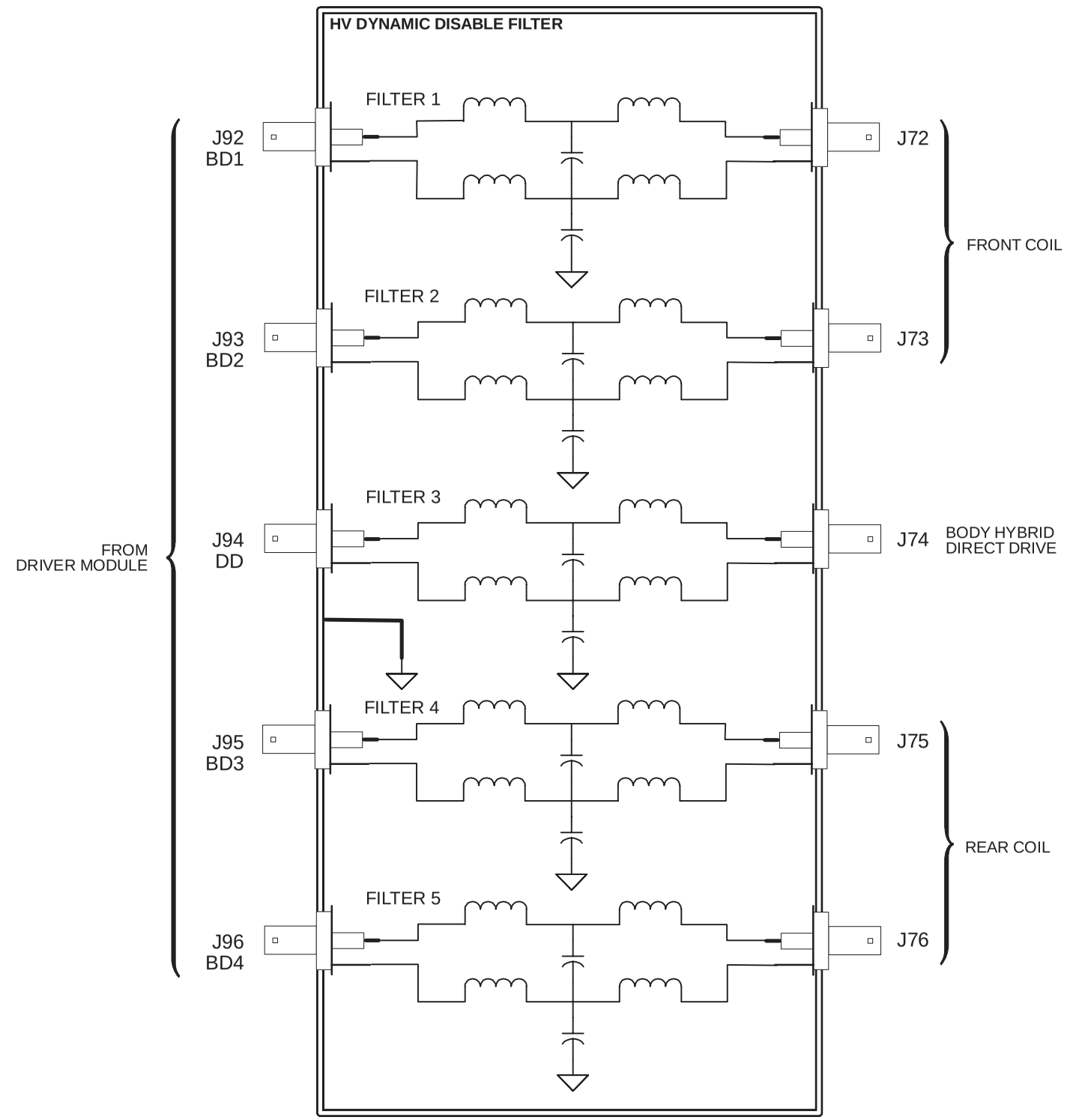

NOTE: Connector shields are electrically isolated from enclosure housing.

EXCITE HD (12.x) and HDx (14.x) MGD/RRF/RF SUBSYSTEM

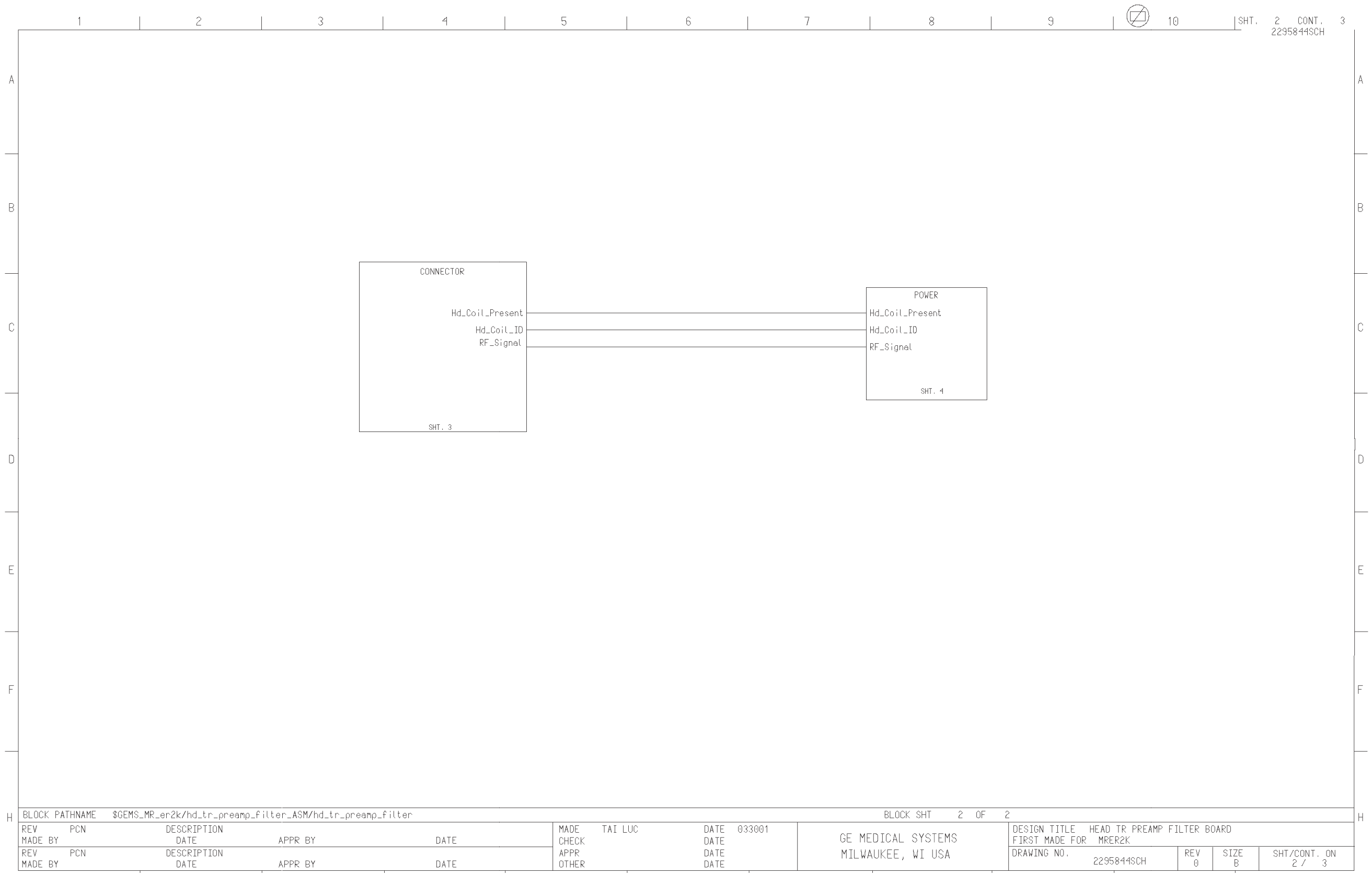

EXCITE HD (12.x) and HDx (14.x) MGD/RRF/RF SUBSYSTEM

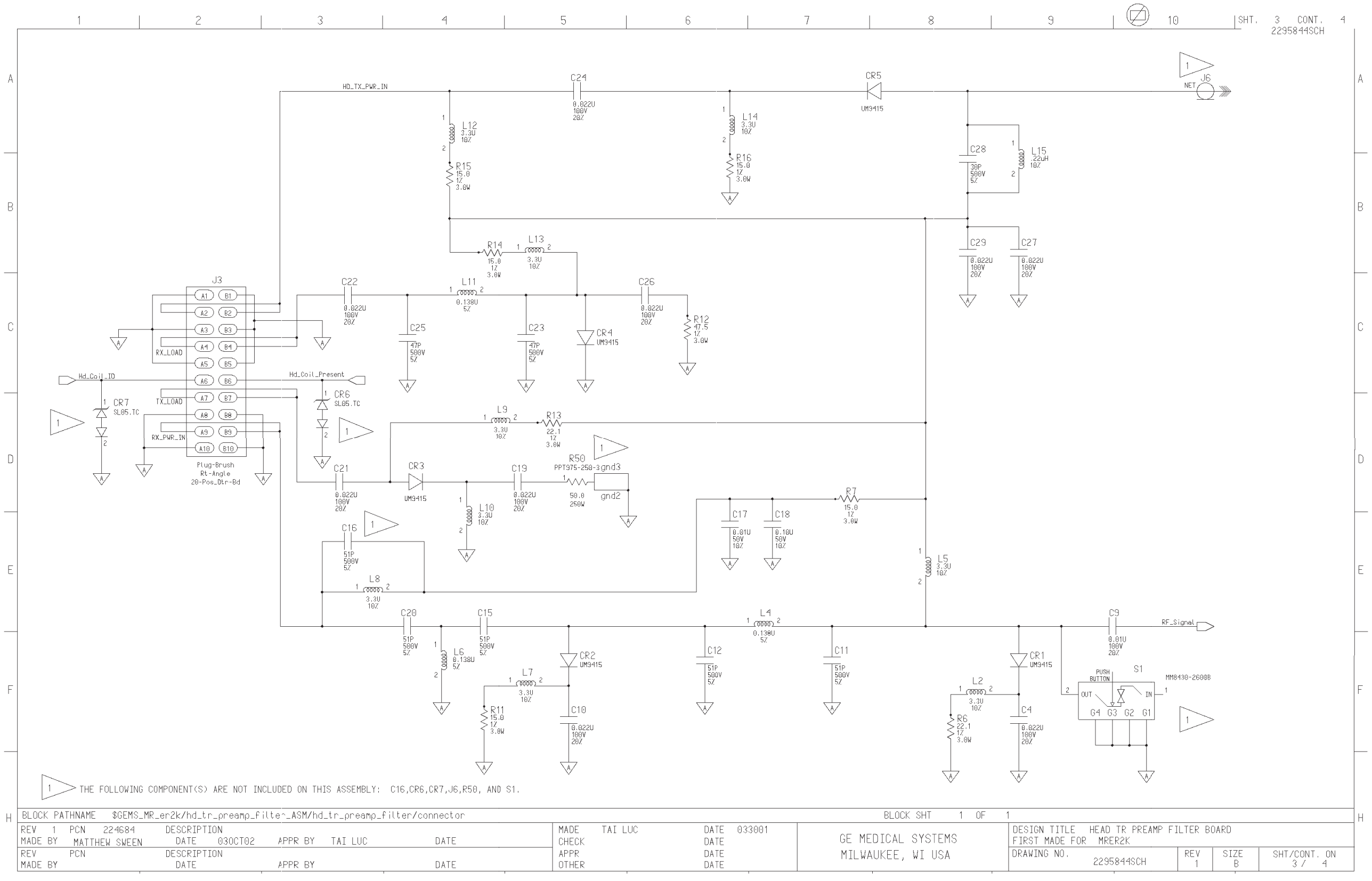

EXCITE HD (12.x) and HDx (14.x) MGD/RRF/RF SUBSYSTEM

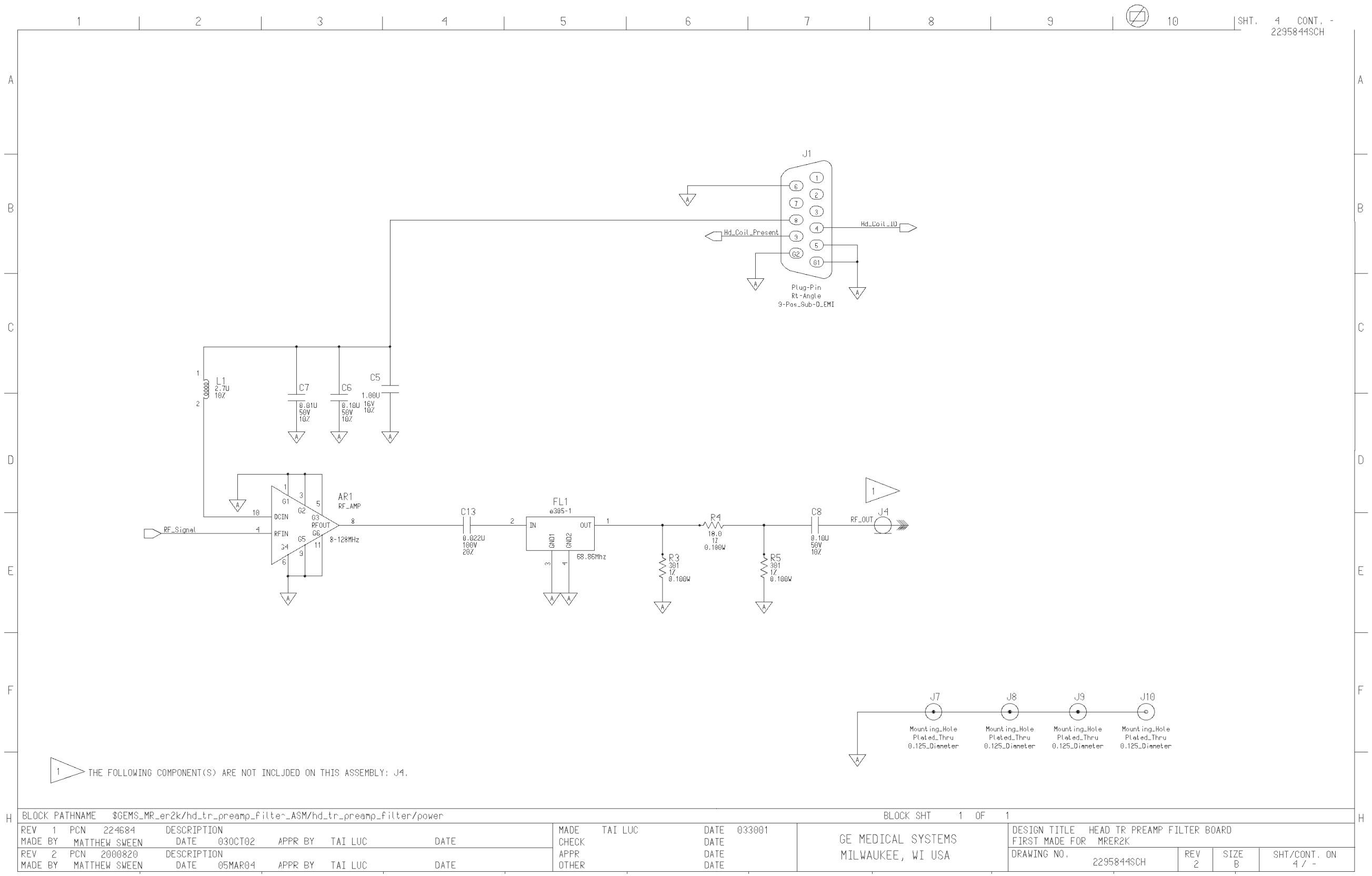

EXCITE HD (12.x) and HDx (14.x) MGD/RRF/RF SUBSYSTEM

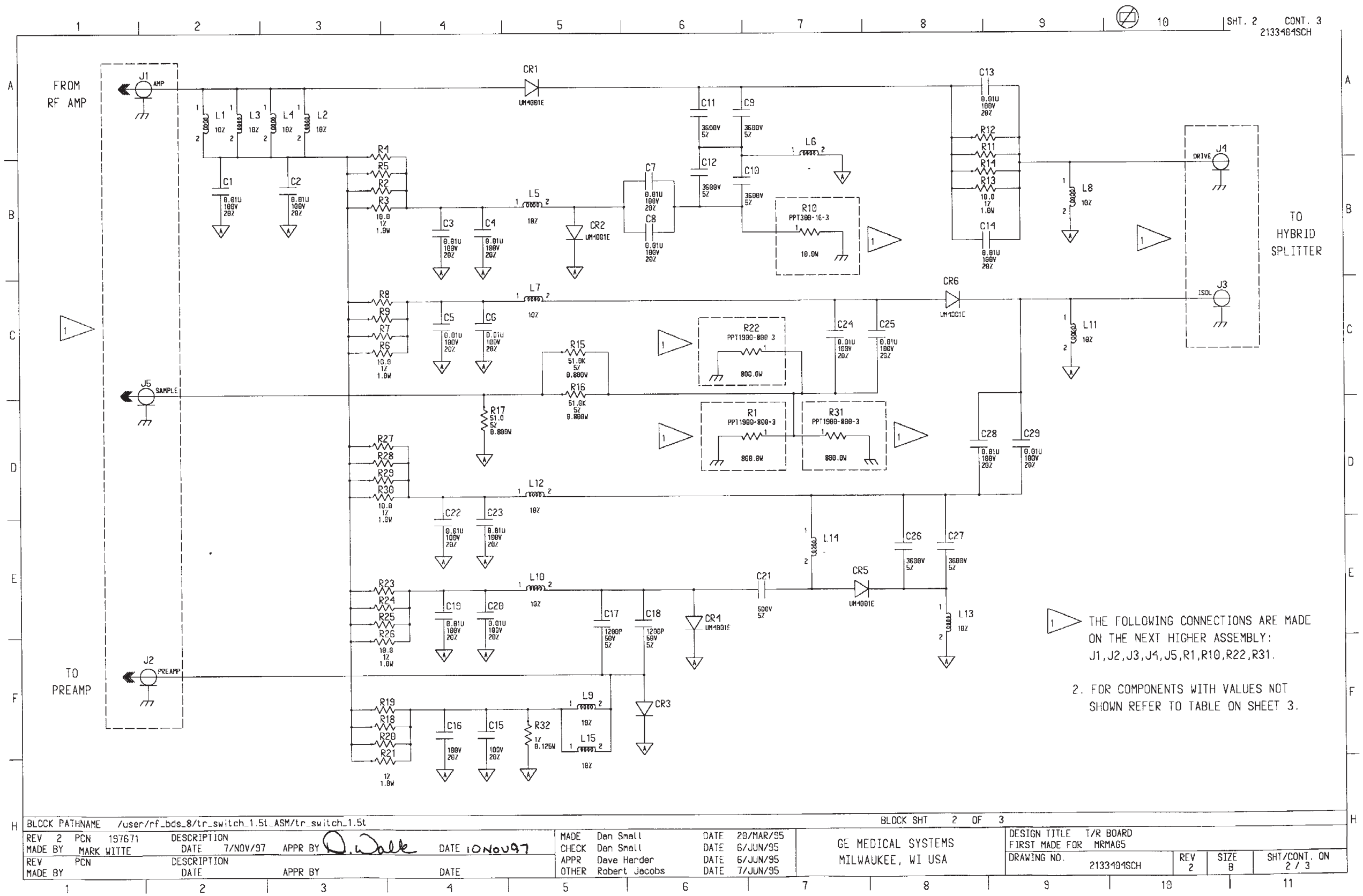

EXCITE HD (12.x) and HDx (14.x) MGD/RRF/RF SUBSYSTEM

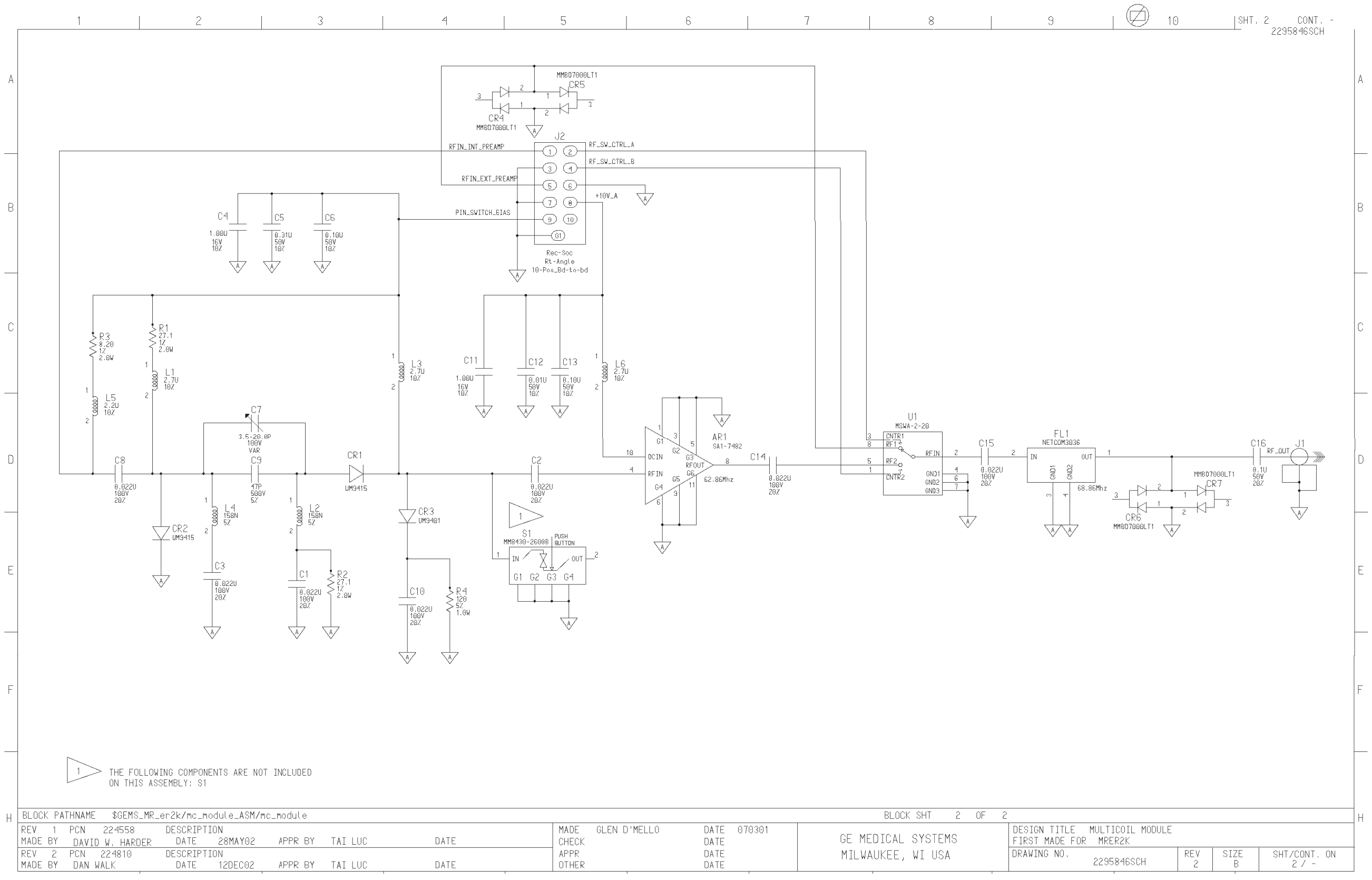

EXCITE HD (12.x) and HDx (14.x) MGD/RRF/RF SUBSYSTEM

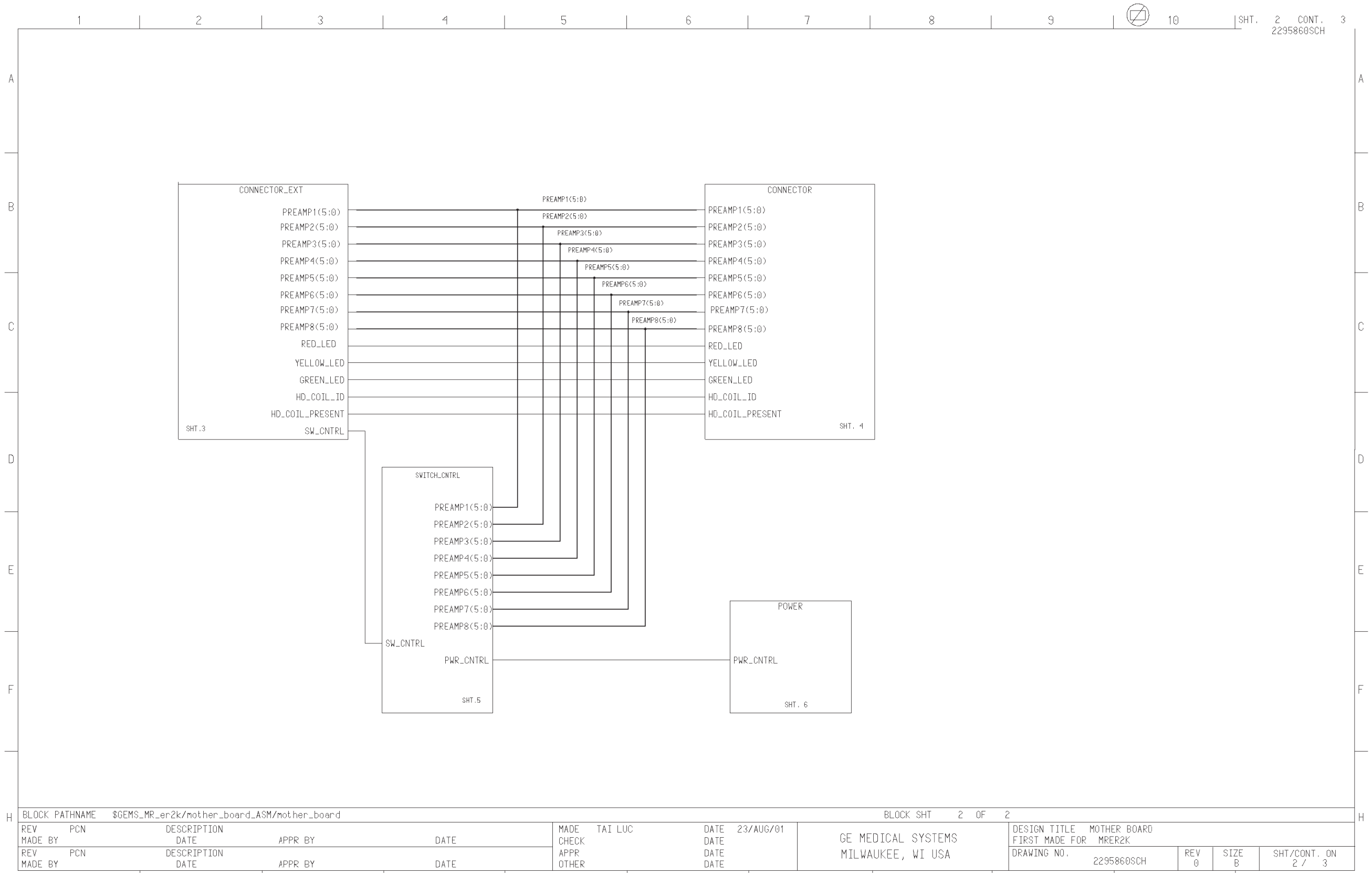

EXCITE HD (12.x) and HDx (14.x) MGD/RRF/RF SUBSYSTEM

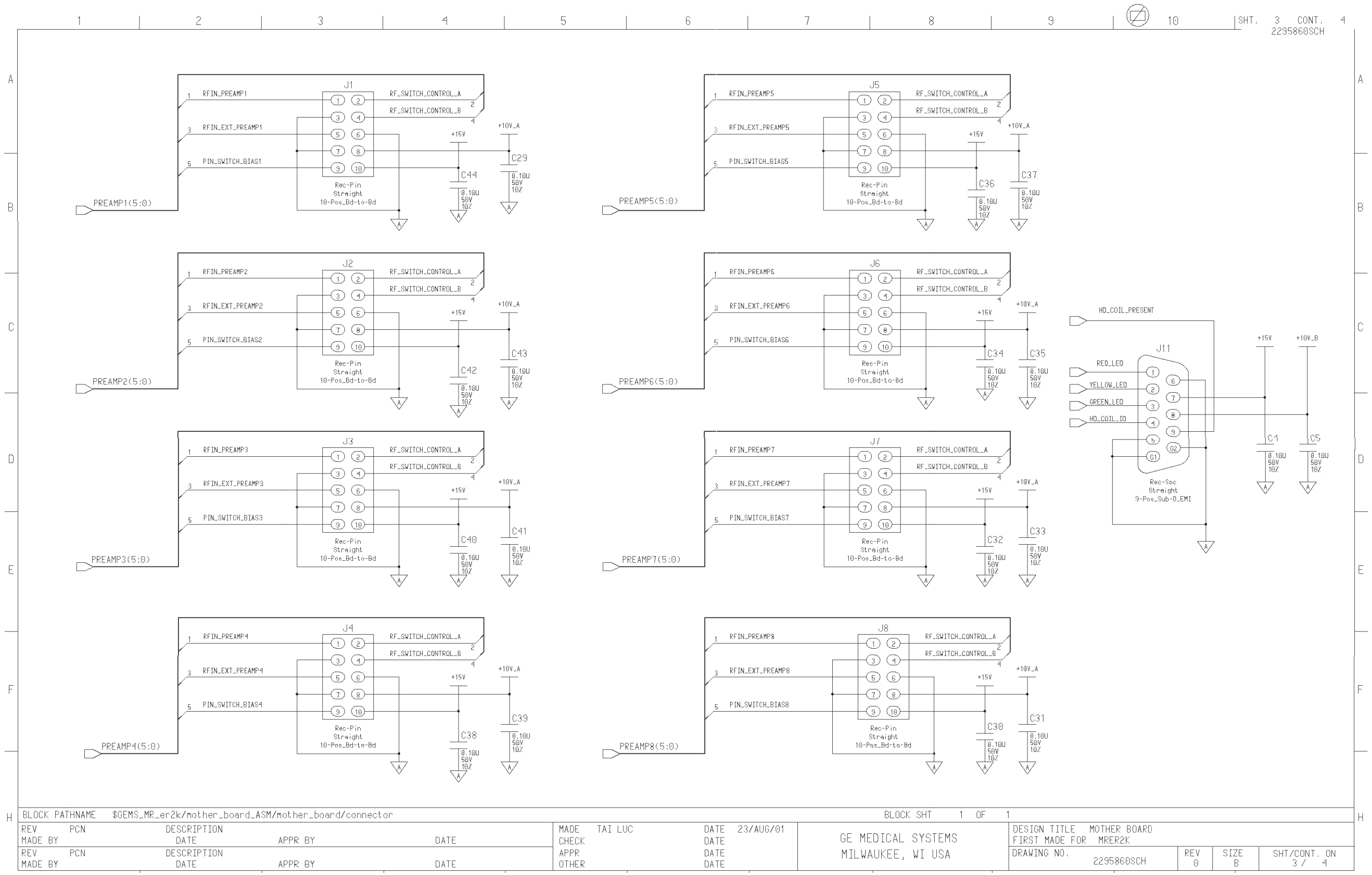

EXCITE HD (12.x) and HDx (14.x) MGD/RRF/RF SUBSYSTEM

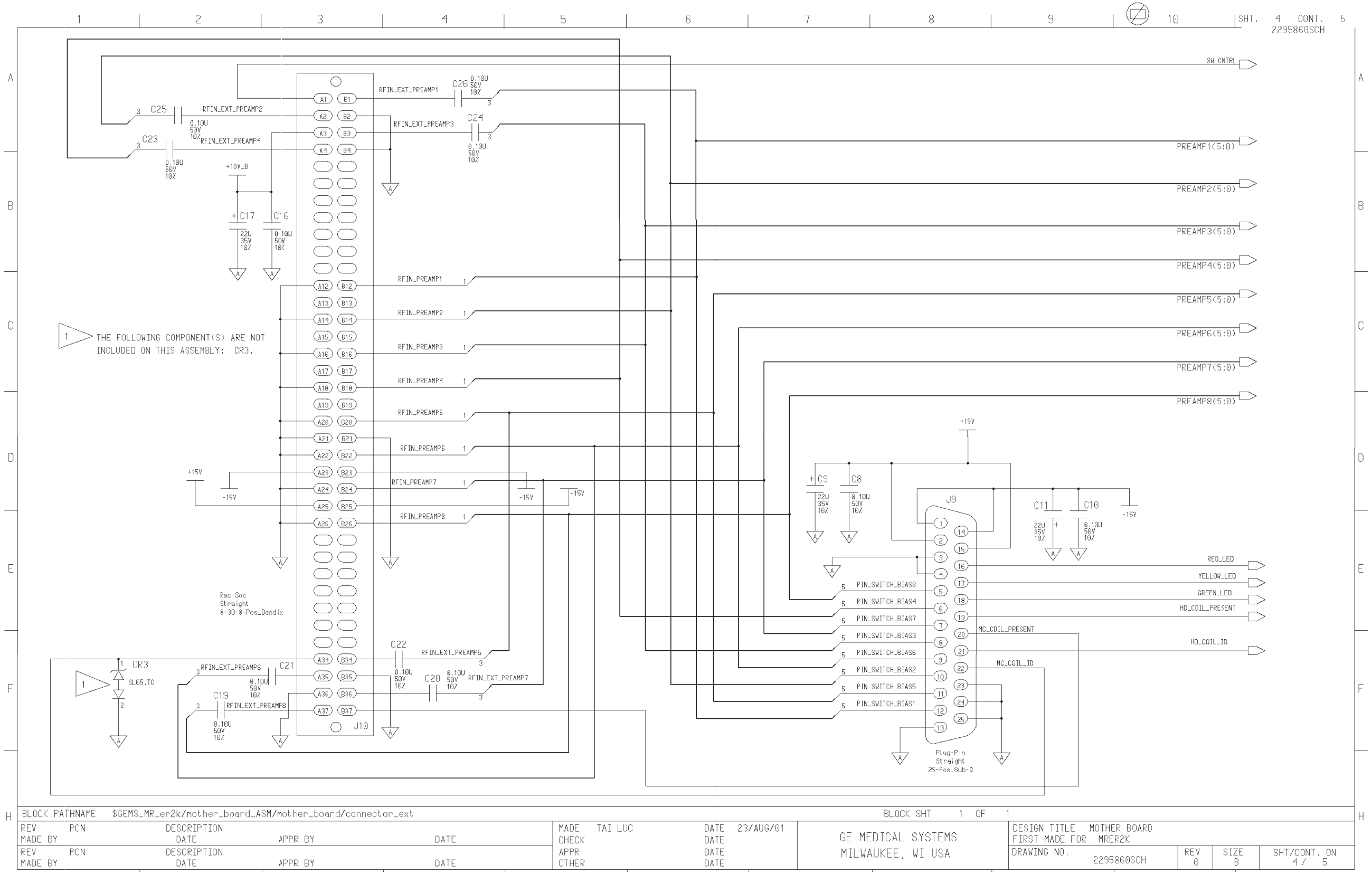

EXCITE HD (12.x) and HDx (14.x) MGD/RRF/RF SUBSYSTEM

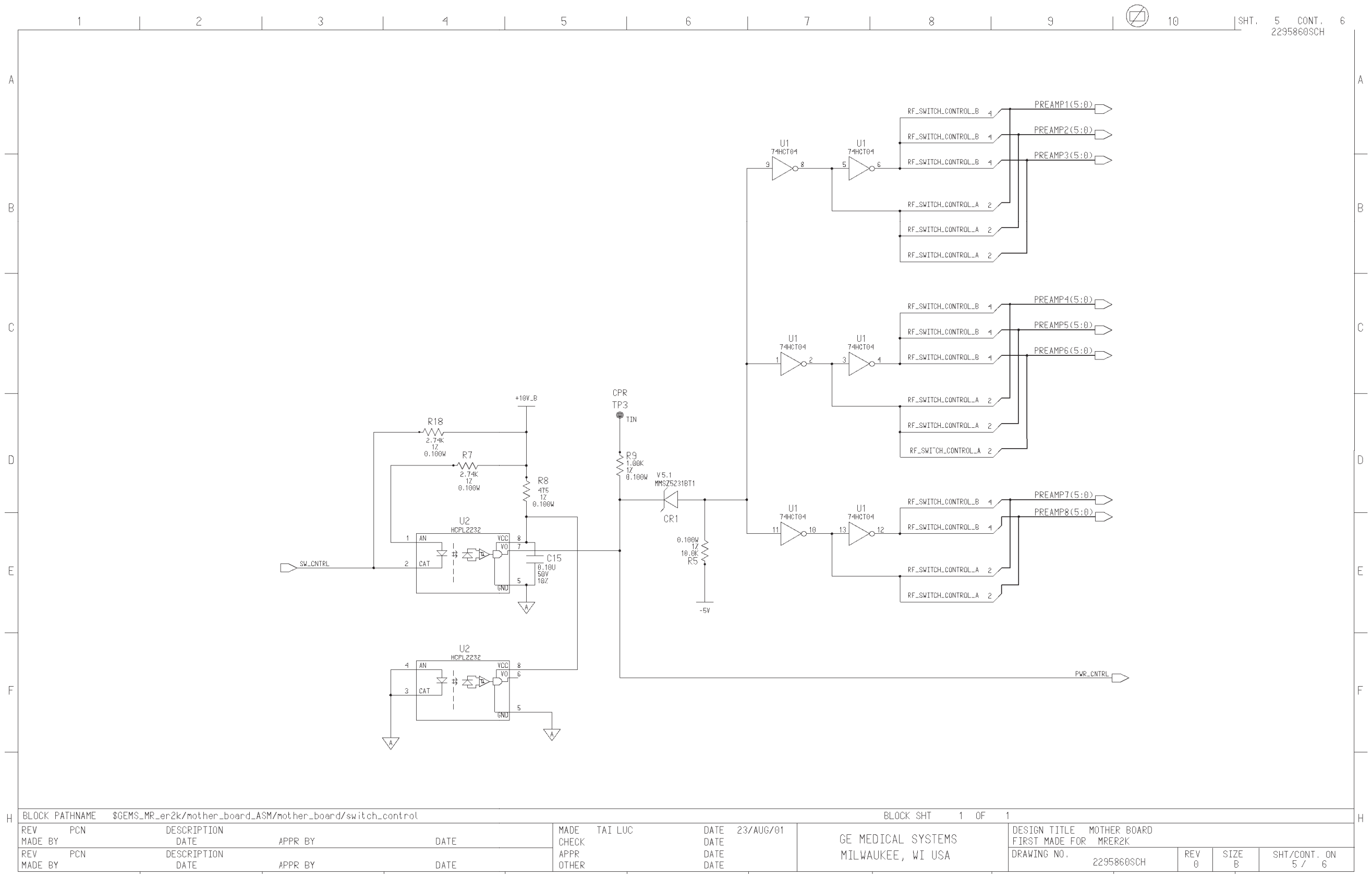

EXCITE HD (12.x) and HDx (14.x) MGD/RRF/RF SUBSYSTEM

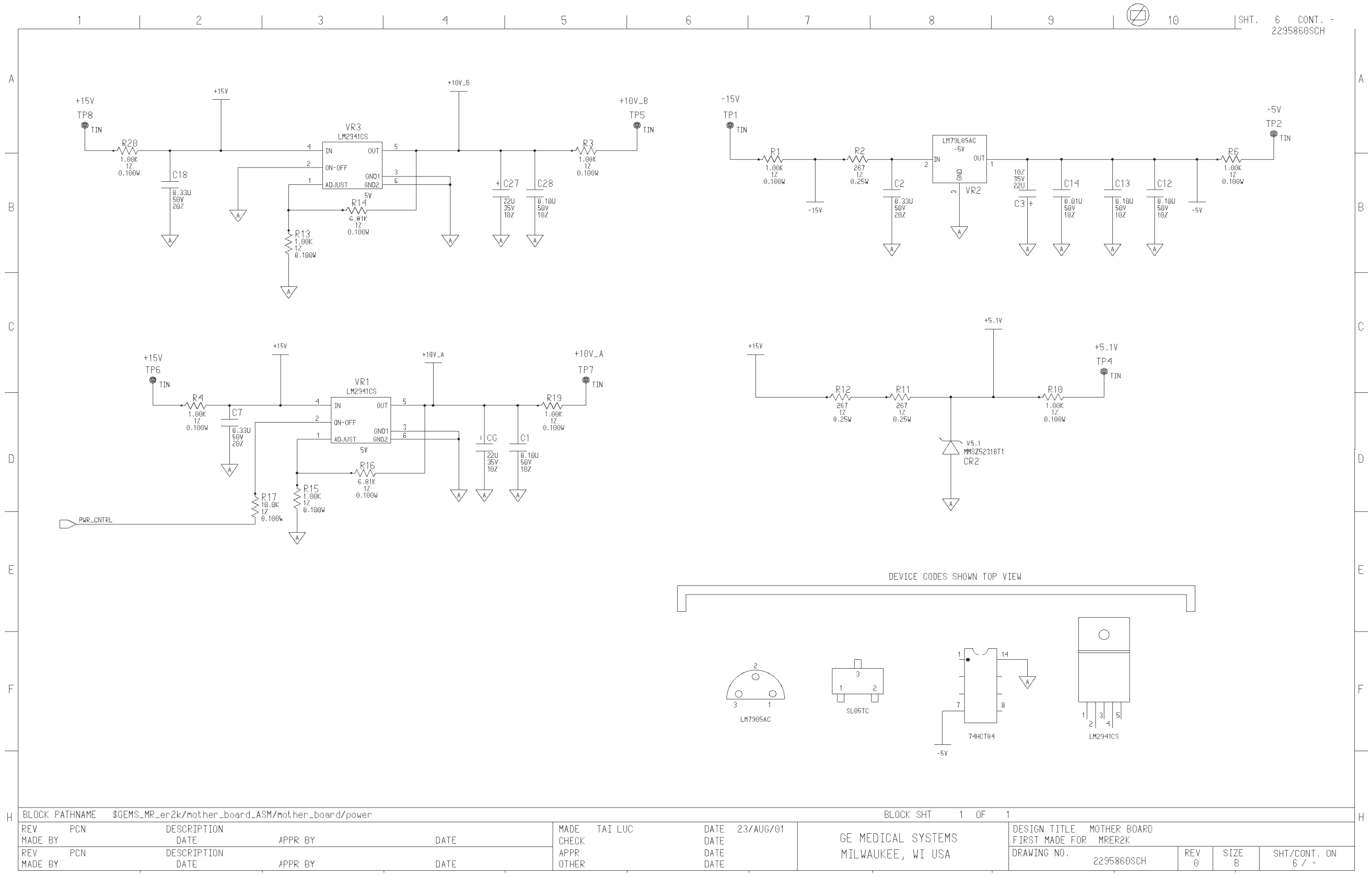

EXCITE HD (12.x) and HDx (14.x) MGD/RRF/RF SUBSYSTEM

COOLING SYSTEM

TABLE OF CONTENTS

Water Chillers Subsystem Group Interconnect Diagrams

ILLUSTRATION **PAGE 1–1**

1 OUTDOOR TSCC & RCP

2 INDOOR WATER COOLED TSCC

3 INDOOR AIR COOLED TSCC

4 OUTDOOR TGWC & RCP

5 INDOOR WATER COOLED TGWC

6 INDOOR AIR COOLED TGWC

7 DUAL INDOOR MRCC

8 INDOOR MRCC

9 DUAL OUTDOOR MRCC

10 OUTDOOR MRCC

11 INDOOR GWHX

Note:

For all Chillers and Cooling System variations (SEE Vendor Manuals on MR Service Methods CDROM)

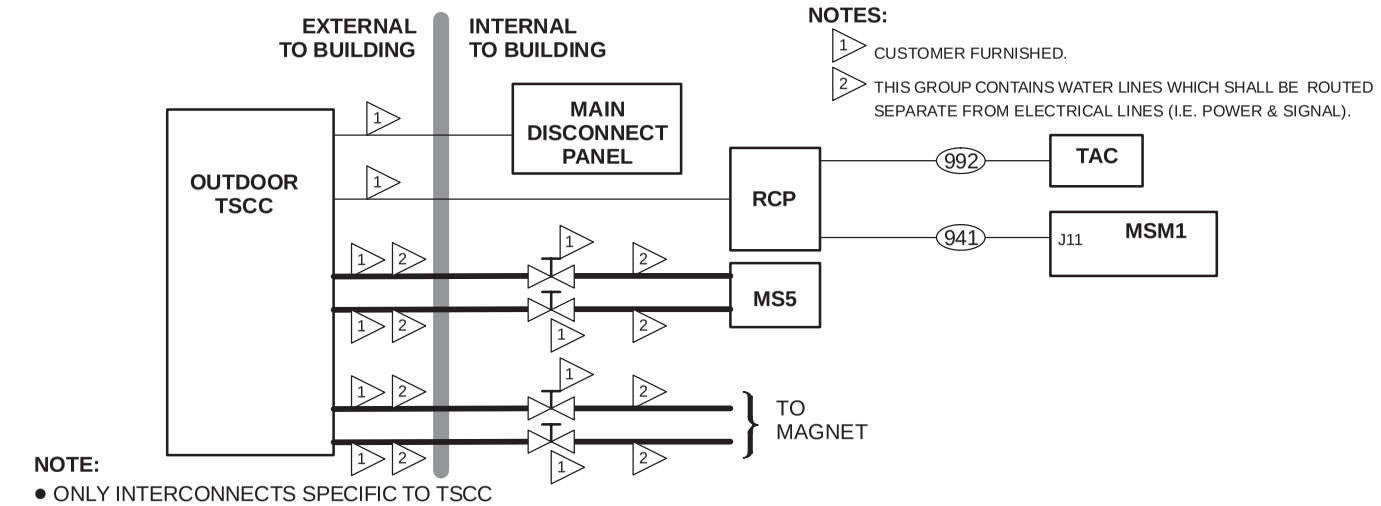

NOTE:
- ONLY INTERCONNECTS SPECIFIC TO TSCC SUBSYSTEM EQUIPMENT SHOWN HERE.

ILLUSTRATION 1 – OUTDOOR TSCC & RCP SUBSYSTEM GROUP INTERCONNECT DIAGRAM

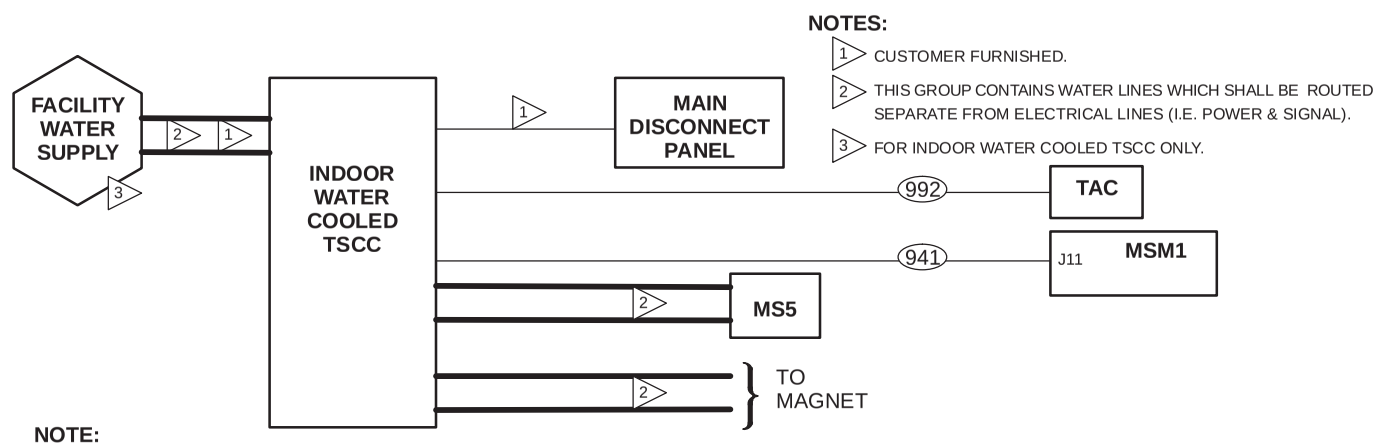

NOTE:
- ONLY INTERCONNECTS SPECIFIC TO TSCC SUBSYSTEM EQUIPMENT SHOWN HERE.

ILLUSTRATION 2 – INDOOR WATER COOLED TSCC SUBSYSTEM GROUP INTERCONNECT DIAGRAM

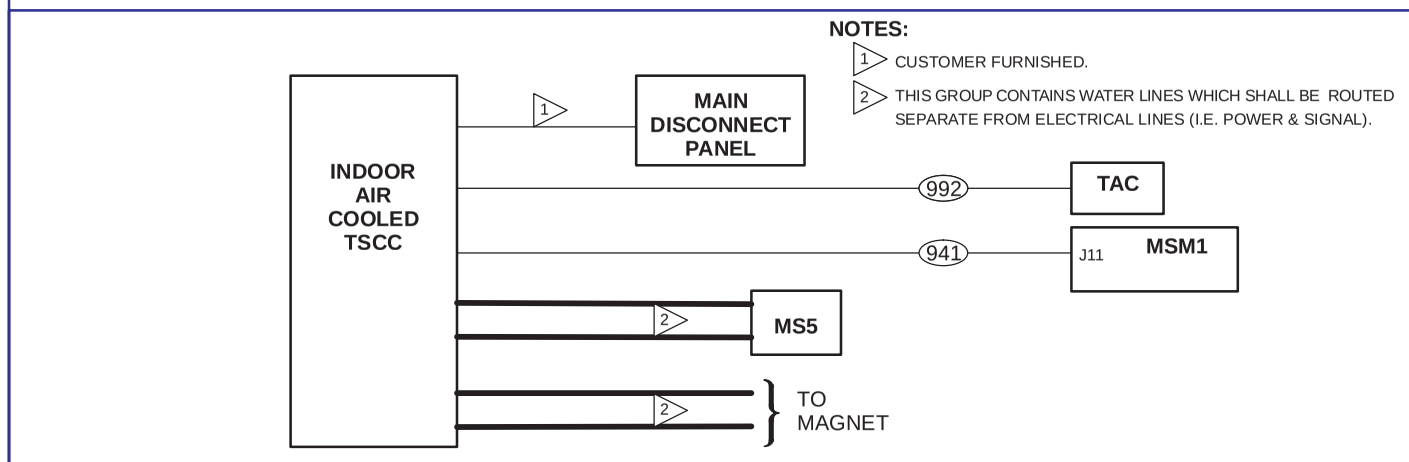

NOTE:
- ONLY INTERCONNECTS SPECIFIC TO TSCC SUBSYSTEM EQUIPMENT SHOWN HERE.

ILLUSTRATION 3 – INDOOR AIR COOLED TSCC SUBSYSTEM GROUP INTERCONNECT DIAGRAM

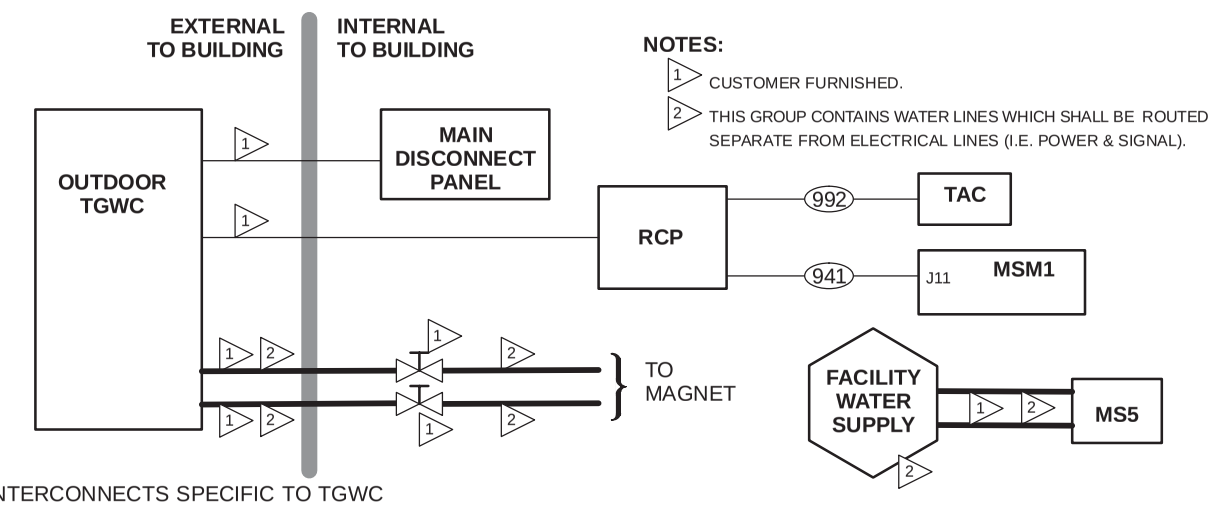

NOTE:
- ONLY INTERCONNECTS SPECIFIC TO TGWC SUBSYSTEM EQUIPMENT SHOWN HERE.

ILLUSTRATION 4 – OUTDOOR TGWC & RCP SUBSYSTEM GROUP INTERCONNECT DIAGRAM

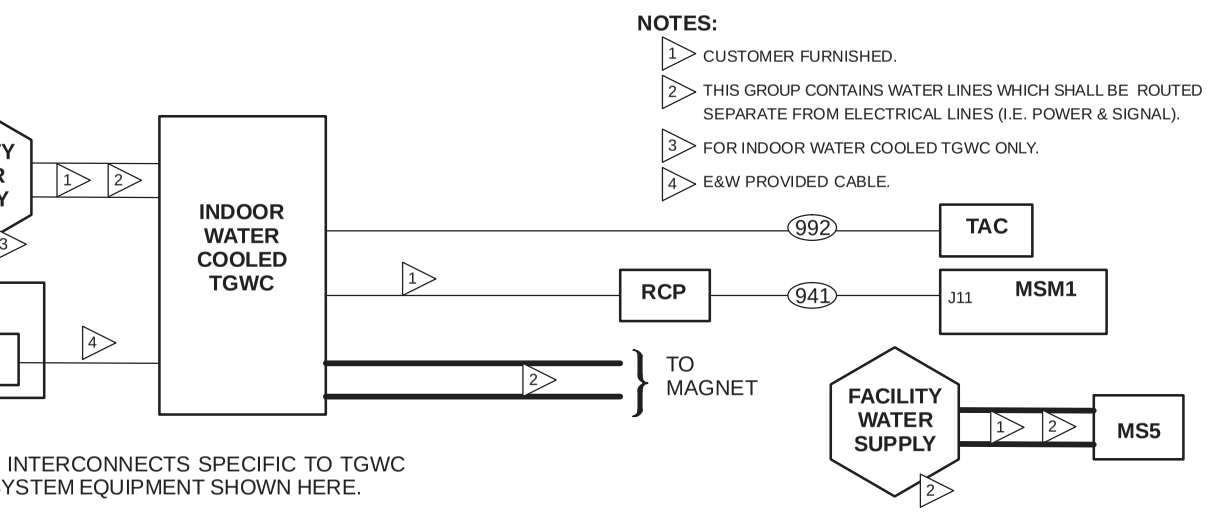

NOTE:
- ONLY INTERCONNECTS SPECIFIC TO TGWC SUBSYSTEM EQUIPMENT SHOWN HERE.

ILLUSTRATION 5 – INDOOR WATER COOLED TGWC SUBSYSTEM GROUP INTERCONNECT DIAGRAM

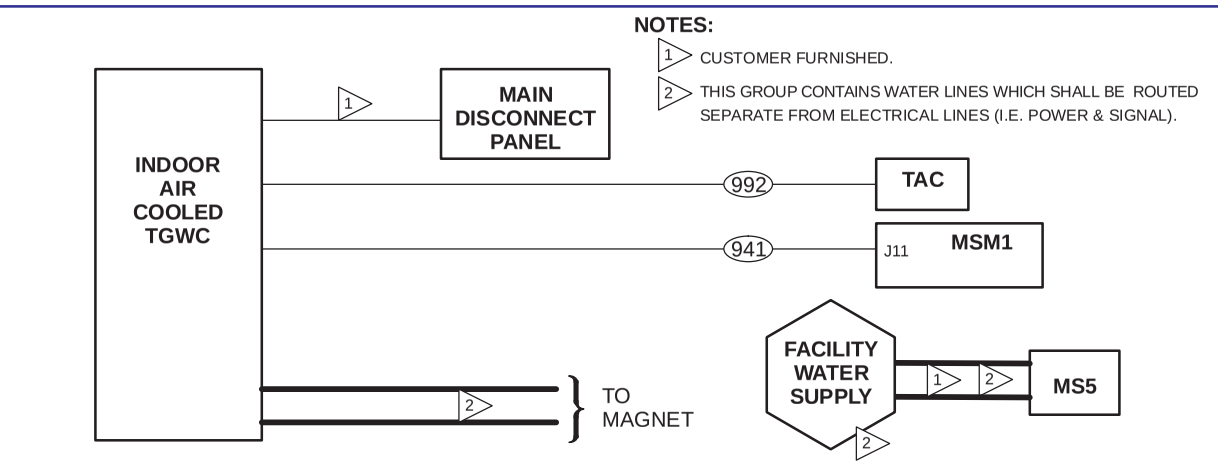

NOTE:
- ONLY INTERCONNECTS SPECIFIC TO TGWC SUBSYSTEM EQUIPMENT SHOWN HERE.

ILLUSTRATION 6 – INDOOR AIR COOLED TGWC SUBSYSTEM GROUP INTERCONNECT DIAGRAM

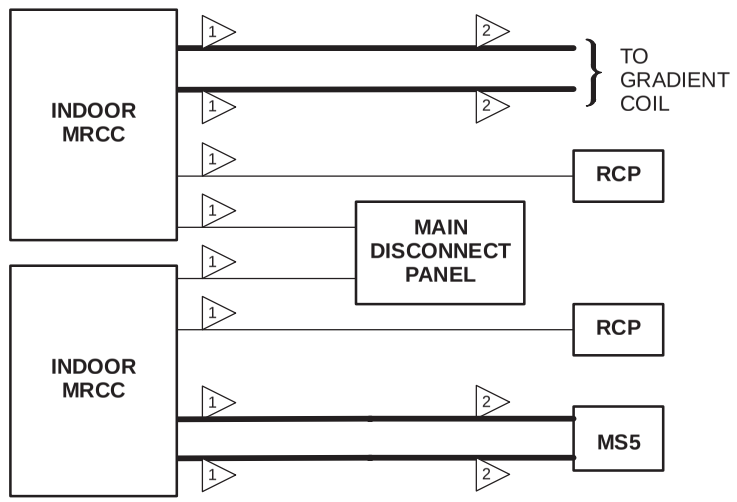

NOTES:
1. CUSTOMER FURNISHED.
2. THIS GROUP CONTAINS WATER LINES WHICH SHALL BE ROUTED SEPARATE FROM ELECTRICAL LINES (I.E. POWER & SIGNAL).

NOTE:
- ONLY INTERCONNECTS SPECIFIC TO MRCC SUBSYSTEM EQUIPMENT SHOWN HERE.

ILLUSTRATION 7 – DUAL INDOOR MRCC SUBSYSTEM GROUP INTERCONNECT DIAGRAM

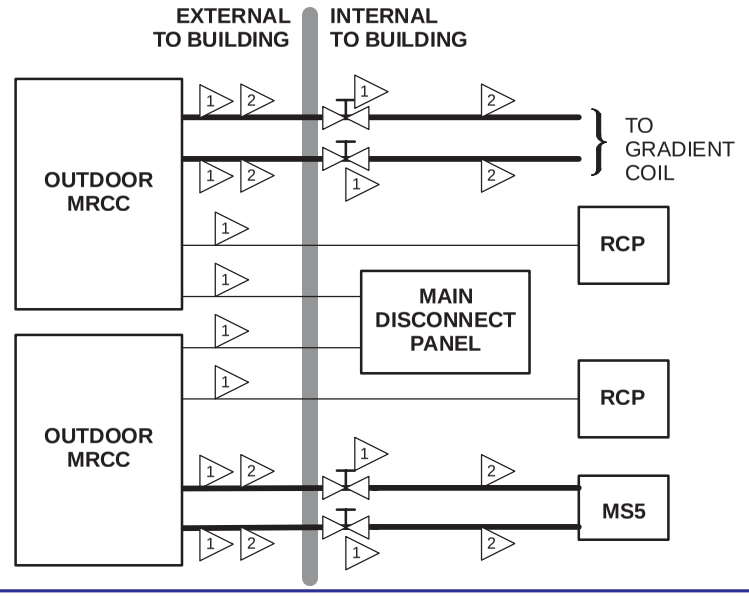

NOTES:
1. CUSTOMER FURNISHED.
2. THIS GROUP CONTAINS WATER LINES WHICH SHALL BE ROUTED SEPARATE FROM ELECTRICAL LINES (I.E. POWER & SIGNAL).

NOTE:
- ONLY INTERCONNECTS SPECIFIC TO MRCC SUBSYSTEM EQUIPMENT SHOWN HERE.

ILLUSTRATION 9 – DUAL OUTDOOR MRCC SUBSYSTEM GROUP INTERCONNECT DIAGRAM

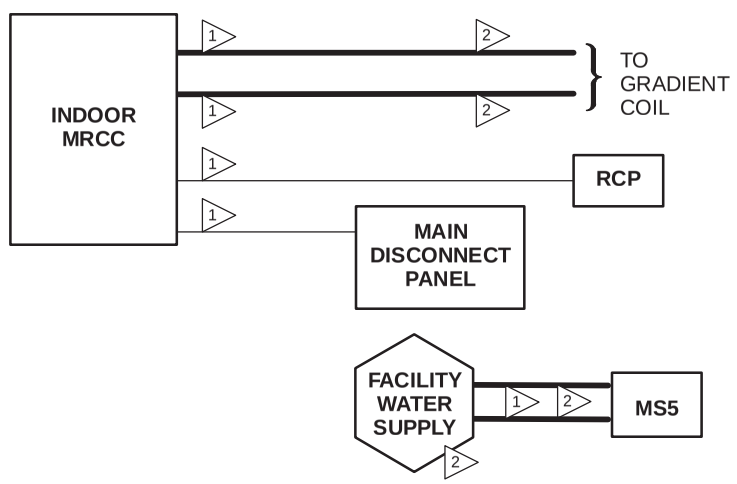

NOTES:
1. CUSTOMER FURNISHED.
2. THIS GROUP CONTAINS WATER LINES WHICH SHALL BE ROUTED SEPARATE FROM ELECTRICAL LINES (I.E. POWER & SIGNAL).

NOTE:
- ONLY INTERCONNECTS SPECIFIC TO MRCC SUBSYSTEM EQUIPMENT SHOWN HERE.

ILLUSTRATION 8 – INDOOR MRCC SUBSYSTEM GROUP INTERCONNECT DIAGRAM

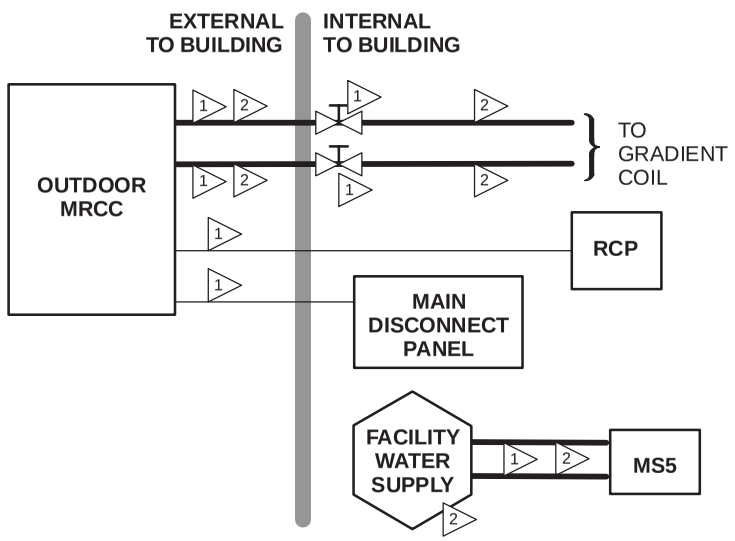

NOTES:
1. CUSTOMER FURNISHED.
2. THIS GROUP CONTAINS WATER LINES WHICH SHALL BE ROUTED SEPARATE FROM ELECTRICAL LINES (I.E. POWER & SIGNAL).

NOTE:
- ONLY INTERCONNECTS SPECIFIC TO MRCC SUBSYSTEM EQUIPMENT SHOWN HERE.

ILLUSTRATIONI 10 – OUTDOOR MRCC SUBSYSTEM GROUP INTERCONNECT DIAGRAM

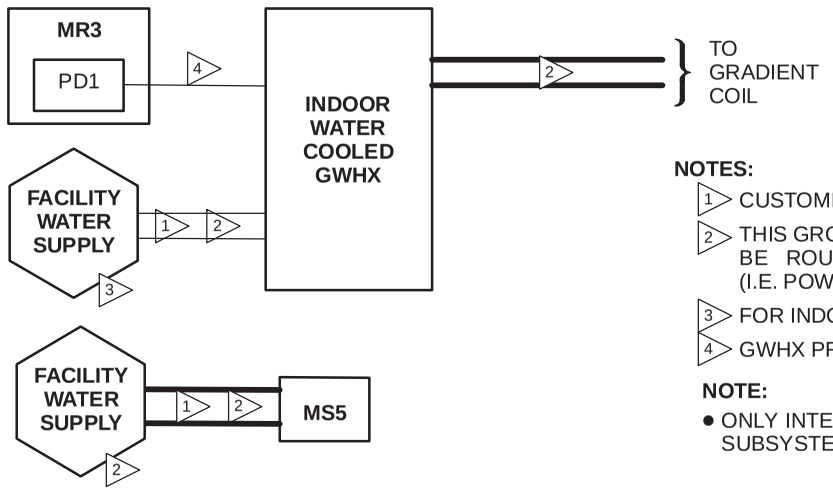

NOTES:
1. CUSTOMER FURNISHED.
2. THIS GROUP CONTAINS WATER LINES WHICH SHALL BE ROUTED SEPARATE FROM ELECTRICAL LINES (I.E. POWER & SIGNAL).
3. FOR INDOOR WATER COOLED GWHX ONLY.
4. GWHX PROVIDED CABLE.

NOTE:
- ONLY INTERCONNECTS SPECIFIC TO GWHX SUBSYSTEM EQUIPMENT SHOWN HERE.

ILLUSTRATION 11 – INDOOR GWHX SUBSYSTEM GROUP INTERCONNECT DIAGRAM